Industrial Heat Tracing Solutions



Nelson™

A complete selection of heat trace cables, controls, monitors and accessories.

EMERSON™

EMERSON POWERS THE RIGHT SYSTEMS FOR THE MOST EXTREME ENVIRONMENTS..

Emerson manufactures highly engineered industrial heating solutions to best meet the needs of each customer and application. From industrial and hazardous locations to commercial construction and maritime vessels, we understand that the dangers of freezing temperatures create extreme conditions requiring time-tested solutions for the protection of both people and equipment. Our Nelson™ industrial heat trace products incorporate traditional heat trace design philosophies with innovative installation, control and monitoring technologies. This allows us to provide a complete offering of products with global approvals to support your unique system. At Emerson, our industrial heat trace cables, controls, monitors and accessories are designed to exceed the demands of facilities all over the globe.

© March 2019

Nelson Heat Trace
Table of Contents

Description	Page
General Information	
Heater Products General Information	1
Design Considerations	2
Commercial/Lite Industrial Heating Systems: Self–Regulating Heating Cables	
Type CLT Self–Regulating Heating Cables	6
230V Type CLT Self–Regulating Heating Cables	9
Commercial/Lite Industrial Heating Systems: Connection Systems	
Type PLT Series Connection Kits	12
Industrial Heating Systems: Self–Regulating Heating Cables	
Type LT Self–Regulating Heating Cables	16
Type HLT Self–Regulating Heating Cables	21
Type XLT Self–Regulating Heating Cables	26
Type LLT Self–Regulating Heating Cables	30
230V Type LT Self–Regulating Heating Cables	33
230V Type HLT Self–Regulating Heating Cables	36
230V Type XLT Self–Regulating Heating Cables	39
230V Type LLT Self–Regulating Heating Cables	42
Industrial Heating Systems: Integral Connection Systems	
AX/EX Series Connection Kits	
Type AX/EX Series Power Connection Kits	45
Type AX/EX Series Splice Connection Kits	47
Type AX/EX Series Tee Connection Kits	49
Type AX/EX Series Powered Splice Connection Kits	51
Type AX/EX Series End of Circuit Termination Kits	53
Type AX/EX Series Lighted End of Circuit Termination Kits	55
HASK Series Connection Kits	56



Type CLT/230V Type CLT



PLT Series



Type LT/230V Type LT



Type HLT/230V Type HLT



Type XLT/230V Type XLT



Type LLT/230V Type LLT



Power Connection Kits



Splice Connection Kits



Tee Connection Kits



Powered Splice Connection Kits



End of Circuit Termination Kit



Lighted End of Circuit Termination Kit



HASK Series Connection Kits

© March 2019

EMERSON

Nelson Heat Trace
Table of Contents

Description	Page
Industrial Heating Systems: Modular Connection Systems	
Modular Connection Systems Installation Diagram	58
Modular Connection Systems Enclosures and Accessories	
EXCJB21–M25 Terminal Enclosure	59
EXCJB31–M25 Terminal Enclosure	60
LPK–LM Insulation Entry Kit	61
HCSK Heater Cable Termination Kit	62
Heater Cable Sealing Kits	63
GHK–M25 Connection Kit	64
GH–M25 Entry Gland	65
Entry Glands	66
Industrial Heating Systems: General Accessories	
Accessories for Field Fabricated Heating Cables	67
Mounting Brackets	
BRK–V Vertical Support Bracket	68
BRK–H Horizontal Support Bracket	69
Industrial Heating Systems: Constant–Wattage Heaters	
Type NC Constant Wattage Heaters	70
Industrial Heating Systems: Mineral Insulated Heaters	
Mineral Insulated Cable	74
Accessories for Factory Fabricated Heating Cables	81
Control and Monitoring Systems: Thermostats	
Thermostat Selection Guide	82
Ordinary Location Thermostats	
TF4X40 Thermostat	84
TA4X140 Thermostat	86
TH4X325 Thermostat	88
TE4X60 Thermostat	90
TE4X60–TC Thermostat	92
TE460 Thermostat	94
TE460–TC Thermostat	96


EXCJB21–M25


EXCJB31–M25


LPK–LM


HCSK


Heater Cable Sealing Kits


GHK–M25


GH–M25


Entry Glands


BRK–V


BRK–H


Type NC

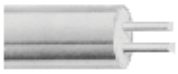
Mineral Insulated Cable


TF4X40


TA4X140


TH4X325


TE4X60


TE4X60–TC


TE460


TE460–TC

Visit our website at www.nelsonheaters.com or contact us at United States: (800) 621-1506 | Europe: +33.3.22.54.13.90.
© March 2019

EMERSON

Nelson Heat Trace
Table of Contents

Description	Page
Control and Monitoring Systems: Thermostats	
Hazardous Location Thermostats	
TA7140 Thermostat	98
TH7325 Thermostat	100
TE760 Thermostat	102
TE760–TC Thermostat	104
Control and Monitoring Systems: Cable Monitoring	
Type CM–1 Cable Monitoring Systems	106
Control and Monitoring Systems: Circuit Management Systems	
CM3 PLC Based Circuit Management System	108
Type CM 2201 Circuit Management Systems	113
Type CM 2202 Circuit Management Systems	115
Distribution Systems	
Type AP Ambient Controlled Distribution	
Type AP–240 Vac Maximum	117
Type AP–480 Vac Maximum	119
Type DP Dedicated Distribution	
Type DP–240 Vac Maximum	121
Type DP–480 Vac Maximum	123
Commercial Applications: Roof and Gutter	
Type CLT Roof and Gutter Deicer	126
Type SLT Roof and Gutter Deicer	129
Commercial Applications: Snow Melting	
Snow Melting Systems	133
Snow/Ice Melting Control Systems	
SMMC–3 Control Panel	140
SMTS–1 Temperature Sensor	142
SMAS–1 Aerial Moisture Sensor	143
SMPS–1 In–Ground Sensor	144
SMGS–1 Gutter Sensor	145
SS–1 Automatic Snow/Ice Melting Controller	146


TA7140


TH7325


TE760


TE760–TC


Type CM–1


CM3 PLC


Type CM 2201


Type CM 2202


Type AP


Type DP


Type CLT


Type SLT


SMMC–3


SMTS–1


SMAS–1


SMPS–1


SMGS–1


SS–1

© March 2019

EMERSON

Nelson Heat Trace

Table of Contents

Description	Page
Commercial Applications: Hot Water Temperature Maintenance System	
Type LT Domestic Hot Water Maintenance	147
PLT–Series Connection Kits and Accessories	150
Commercial Applications: Frost Heave	
Frost Heave Prevention Guide	152
Technical Information	
Thermal Design Piping Systems	155
Thermal Design Vessels/Tanks	160



Type LT



PLT–Series

Visit our website at www.nelsonheaters.com or contact us at United States: (800) 621-1506 | Europe: +33.3.22.54.13.90.
© March 2019

EMERSON

Heater Products General Information

This section provides basic information for the design and selection for the proper Nelson heat trace products for pipe and vessel heating needs.

To specify components for an effectively designed, totally electric heat trace system, it is necessary to understand the basic principles involved. A heat trace system is designed to replace heat lost through the thermal insulation from equipment in the system. In some applications, heat tracing will also be able to provide enough heat to significantly change the process temperature.

Nelson always recommends the use of thermal insulation since heat loss from bare surfaces is very high and heat transfer between the heater and the pipe/vessel is highly variable. All insulation should be weatherproofed. Wet insulation is ineffectual and heater output is insufficient to dry it.

Nelson Heating Cable Products
Nelson supplies several distinctively different types of electric heaters - Self Regulating, Constant Wattage, Mineral Insulated. Each type has its own characteristics, often making one more suitable for a certain application than the others. It is important to determine which

Self Regulating Heater Cable
Self Regulating Heater Cable will adjust its own output in response to pipe temperature. Available in a variety of temperature and power ratings up to +230°C (+450°F) and 65.6w/m (20w/ft.). Product features include:

- Variable Output
  - Self-Regulating heaters will react to variations in temperature encountered at every point along its length. Colder sections receive more heat output, while warmer sections receive less. This provides greater energy efficiency and more uniform pipe temperatures.
- Can Be Overlapped Without Damage
  - Because Self-Regulating heaters controls its own output, overlapped sections produce less heat, eliminating “hot spots” and possible burn-through common with other types of cable.
- Fail Safe
  - Upon reaching the upper limits of its temperature range, Self-Regulating heaters diminishes its own heat output to an insignificant level. This guarantees that maximum temperatures (T ratings) cannot be exceeded no matter what product is used in any application.
- Easy Installation
  - Because of its infinite parallel path circuitry, Self-Regulating heaters can be cut to any length in the field without affecting the heat output or creating “dead zones”.

Constant-Wattage Heater Cable
Constant Wattage Heater Cable is a parallel resistance heater that produces the same watts-per-foot of heat along its entire length.

- Easy Installation
  - Constant-Wattage heaters can be cut to length and terminated in the field.
- Economical
  - Provides good power densities and exposure temperatures with parallel circuit cable capabilities at economical prices. Exposure Temperatures to +204°C (+400°F). Ideal for maintaining many process temperature applications.

Mineral Insulated Heater Cable
Mineral insulated Cable is a series conductor, high temperature heater cable with a special, thin metal sheath. Some of MI advantages are:

- Corrosion-Resistant
  - Alloy 825 sheath provides excellent corrosion resistance and immunity from chloride stress corrosion - a common problem with stainless steel.
- Ideal for High Temperature Applications
  - Mineral Insulated heaters can withstand exposure temperatures up to 593°C (1100°F).
- Ratings To 600V
  - Mineral Insulated heaters are available in a variety of voltages to match the available power supply.
- High Heat Output
  - Mineral Insulated heaters have heat output ratings up to 10 times higher than most other cables, reducing the amount of cable required.
- Rugged Construction
  - A durable metal sheath provides greater mechanical protection.
- Thin Wall Construction
  - A unique manufacturing process allows thin wall cable construction for easier field installation.

© March 2019

Heat Trace Considerations

1. Types of Heater Control
There are two types of temperature control, ambient (air sensing) and line sensing. On small projects either of these types of control is achieved with individual component temperature controllers. On larger projects, it may be advantageous in terms of cost and maintenance, to use larger central control cabinets with electronic control.

Types of Heater Control

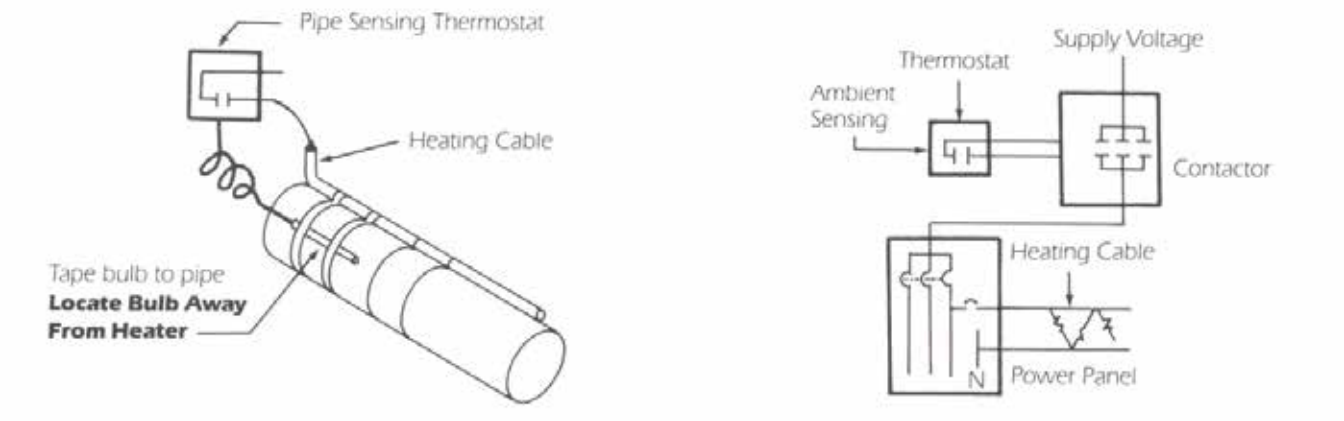

Line Sensing Control
Line sensing control means a thermostat or controller is used to sense each pipe or vessel's actual temperature. The heater is only energized when that line's temperature drops below the thermostat's switching point. When controlling a heater circuit that has both flowing and non-flowing segments, the sensor should be put on the non-flowing branch of the circuit. On critical temperature control processes, separate heater circuits may be required. Advantages of this system include close temperature control and minimum energy usage. Disadvantages are initial control and maintenance costs that will rise in proportion to the number of controllers used.

Ambient Air Control
Ambient control means the heater is turned "off" and "on" depending on the temperature of the surrounding air. This system uses an ambient air sensing thermostat or controller that may turn on an entire panel load of heaters when the air reaches a predetermined temperature (40°F is a typical value). When energizing multiple heater loads, a contactor is used to perform the actual switching. Advantages of ambient control include simplified control wiring and lower control maintenance costs. Disadvantages include loss of precise temperature control and excessive energy consumption (heaters may be on when pipe is being warmed from products flowing through it).

2. Effects of Heat Sinks.
Any thermally conductive material that penetrates though the insulation pulls heat away from the pipe or vessel at a high rate. If extra heater is not installed at these points, the system will be colder in those areas. Self-regulating heaters also require extra cable at those points.

3. Heat-Up Requirements.
Heat loss tables do not include adequate power to provide rapid heat up of pipes or vessels filled with product. If heat-up is required, extra heat must be added. This is often accomplished by using extra heaters that are turned on only in heat-up situations.

4. Hazardous Area Design Criteria.
Heaters installed in hazardous (classified) areas must have sheath temperatures that do not exceed the ignition temperature of the hazardous gas or dust that is present. The method of limiting this temperature varies with different types of products: Self-regulating heaters may be used based on their maximum "T Rating." Under no conditions will the heater cable exceed those temperatures. Constant-wattage heaters and mineral insulated heaters, must be designed not to exceed the ignition temperature. For classified areas, this is achieved by limiting the watt density in the design so the heater's sheath temperature will not exceed the required temperature.

Each heater installed in a hazardous area must have a metal shield or sheath. This provides an effective return ground path as well as providing added physical protection.

All connections and remotely located control equipment should meet the criteria for hazardous area application.

© March 2019

5. Nonmetallic Surfaces
Nonmetallic pipes and vessels often have low softening and melting points. Care must be taken in design not to let the surface or heater reach that temperature. LT and CLT series cables can be used safely without concern. Other cables must use the following precautions:

- Use thermal over limit protection
- Use metal foil tape over and under (sandwiching) the heater cable
- Limit wattage design so cable sheath temperature will not reach the pipe softening point.

6. Designing Self-Regulating Heater Cables for Plastic Pipe
Plastic pipe is not thermally conductive. Although the self-regulating heater cable will itself get hotter in relation to a given pipe temperature, less heat is transferred to plastic pipe than metal pipe. Use Table 8 to determine the correct output of self-regulating heater cable when used on plastic pipe.

There are three methods of applying heater cable to plastic pipe:

- Regular attachment at one foot intervals
  - Attachment of cable at one foot intervals with no heat sinking.
- Foil over the cable
  - Fasten the cable at one-foot intervals (as above) and then cover with a layer of adhesive backed foil tape.
- Foil Over/Under (sandwiched) cable
  - Put a layer of adhesive backed foil tape on the pipe. Fasten the cable over the foil tape per (A) above. Then put another layer of foil tape over the cable.

7. Use of Metal Foil Tape to Lower Sheath Temperature on Metal Pipe
Metal foil tape can be used on all types of heaters to lower sheath temperatures. This should only be done to improve life expectancy. DO NOT USE THIS TECHNIQUE TO LOWER SHEATH TEMPERATURES FOR DIVISION 1 HAZARDOUS APPLICATIONS.

8. Temperature "Piling" in Vertical Installations
Heated air and fluid rises. In a vertical piping run, you can expect to see a 1.5 to 3.0 degree C (F) rise per vertical foot of pipe. Temperature control locations and circuit breakup should be used to overcome this temperature control problem.

9. Static vs. Flowing Pipe Fluid Conditions
Heat tracing is needed during stagnant conditions. It is very difficult to freeze or overheat a pipe while product is flowing through it. Most design concerns should center around static situations. For heating of fluids in flowing pipes, consult the factory.

10. Proper Termination and Sealing of Cable Terminations
Cable ends, splices, etc. must be properly sealed to prevent moisture entry. Condensation in junction boxes and rain water leaks in insulation lagging are common moisture sources. Moisture is a primary source of electrical arc failure in heating cable.

11. Foamed/Poured Insulation
When heating cables are to be insulated with foamed, mudded, or poured insulation, the cable should be covered by foil. This is to prevent the cable from being thermally isolated from the pipe. If thermally isolated the cable will not get sufficient heat to the pipe.

12. Wet Insulation/No Insulation
Dry, adequate insulation is a necessity for a pipe heating application. Heat losses are 20 to 50 times greater on wet or uninsulated systems. Water leaks (around valves, hangers and lagging lap joints) will soak the insulation. The heating cable cannot maintain temperatures with wet insulations. Wet insulation will also accelerate corrosion. Once insulation becomes wet, the heating cable will not provide sufficient heat to dry it.

13. Annual System Check-Out
Check your heating system before each freeze season. Process maintenance systems should be on year-round. However, some of the lower maintenance products will not develop a wet insulation "freeze up" until ambient temperatures drop. A system check should verify that all cables are working. Check and repair insulation waterproofing, spot check temperature control function, and whatever else is appropriate to your situatio

Article 427-22 of the National Electrical Code requires ground-fault equipment protection for each branch circuit supplying electric heating equipment. Exceptions to this requirement can be found in the NFPA 70, National Electrical Code.

© March 2019

Self-Regulating Heater Cable Output on Plastic Pipe
Power output of a self-regulating heater cable is dependent on its thermal coupling to the pipe. Since all published power output data is calculated with the product on metal pipe, power output must be derated for use on plastic pipe because of its lower thermal coupling. To do this, begin with the required watts/foot value (heat loss) on the vertical axes (W/M (W/Ft) Plastic Pipe) in Table 8. Read across to the curve denoting installation method being used. Read down from this point and find the value on the horizontal axis (W/M (W/Ft) Metal Pipe). This would be the power output if the cable was installed on metal pipe, and is the proper value to use in selecting cable. There are three recommended ways to install self-regulating heater cable on plastic pipe - without foil, with foil and in a foil sandwich. Each has a different thermal coupling rating between the heater cable and the pipe.

Table 1: Self-Limiting Heater Cable Output On Plastic Pipe

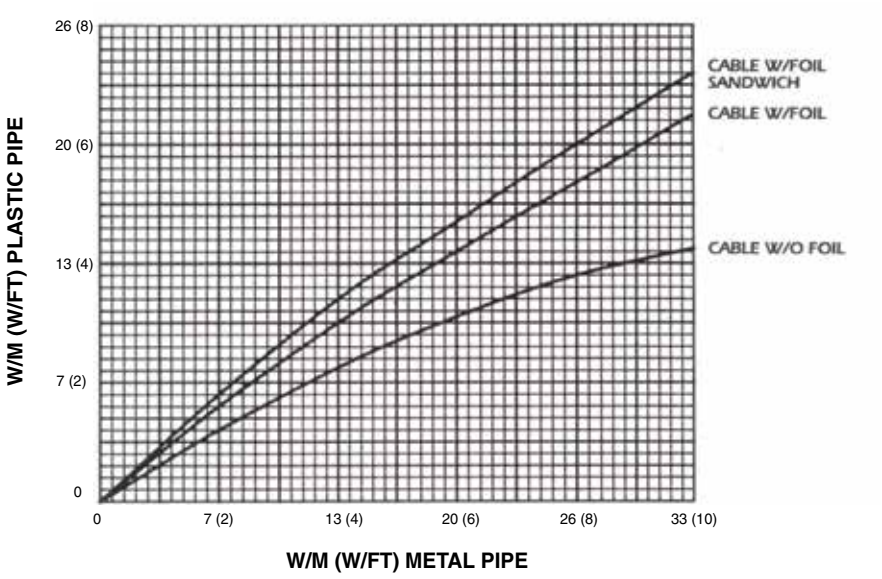

Notes
1. Locate wattage required for plastic pipe on vertical axis of graph.
2. Locate type of installation curve desired.
3. Read horizontal axis to determine correct cable selection

Visit our website at www.nelsonheaters.com or contact us at United States: (800) 621-1506 | Europe: +33.3.22.54.13.90.
© March 2019
EMERSON

General Design Considerations

There is no one fixed way that is correct to heat a pipe or vessel to the exclusion of all the other methods. However, certain types of heaters lend themselves to specific applications. Our products allows the use of selection criteria based on the best product for the application.

1. Maximum Exposure Temperature
Select the heater type based on the maximum temperature the process will reach. Do not exceed the heater rating. Do not use insulation sandwiching for the use of plastic cables on high temperature steam lines. It will increase installed insulation costs by 50% and is very craft-sensitive. MI Cable should be used instead.

2. Maintain Temperature
Select the heater type based on the maximum process maintenance temperature desired. With thermostatic control, higher temperature heaters can be used to maintain lower temperatures.

3. Heat Requirement
Select the heater type that provides adequate heat output based on your heat loss calculations at minimum ambient. Additional heat output can be achieved with spiraling or multiple heaters, but this often increases cost. Because self-regulating heaters reduce their heat output with increased temperature, their efficiency is reduced at higher maintenance temperatures. MI cable is often a more economical choice at elevated maintenance temperatures.

4. Voltage
Increased voltage provides two advantages, lower amperage and longer circuit lengths. Both decrease power distribution and installation costs

5. Area Classification
Heater type and construction vary with area classification. Nelson offers heater options for all area classifications

6. Ease of Installation
Parallel, self-regulating heaters are normally used for lower temperature applications because they are flexible and can be cut to length in the field. With increased maintenance temperatures or higher heat requirements, the efficiency of self-regulating heaters is reduced, and MI cable often provides the best overall system. Nelson MI cable products are manufactured with high temperature alloy conductors and a thin, high temperature Alloy 825 sheath. They can be overlapped up to 82 w/m (25 w/ft.) and can be formed without the use of special tools.

Table 2: Insulation Factors

Product Family	Maximum Power W/m (W/ft.)	Maximum Voltage	Maximum Maintenance Temperature °C (°F)	Maximum Exposure Temperature °C (°F)
CLT Self-Regulating	26 (8)	277	65 (150)	85 (185)
LT Self-Regulating	33 (10)	277	65 (150)	85 (185)
LLT Self-Regulating	33 (10)	277	65 (150)	85 (185)
HLT Self-Regulating	66 (20)	277	121 (250)	215 (420)
XLT-Self-Regulating	66 (20)	277	150 (300)	230 (450)
NC-Constant-Wattage	39 (12)	277	150 (300)	204 (400)
Custom MI	288 (88)	600	371 (700)	593 (1100)

Application for Table	
CLT:	Freeze protection and low temperature maintenance, roof, Gutter de-icing, fire protection systems, non-metallic pipes and tanks for ordinary (unclassified) locations only.
LT:	Freeze protection and low temperature maintenance, roof, Gutter de-icing①, fire protection, domestic hot water systems②, non-metallic pipes and tanks.
LLT:	Freeze protection and low temperature maintenance, non-metallic pipes.
HLT	Process maintenance and steam-cleanable freeze protection.
XLT:	Process maintenance and steam-cleanable freeze protection.
NC	Process maintenance and steam-cleanable freeze protection.
MI	Applications requiring physical protection, high wattages and/or elevated maintenance and exposure temperatures, metallic pipes and vessels only.

① LT self-regulating cable approved for deicing applications.
② LT-A, B, C, D self-regulating cable approved for domestic hot water maintenance applications.

© March 2019

Type CLT Self–Regulating Heaters

For use in Ordinary (Unclassified) Locations

UL:
Ordinary (Unclassified) Locations

CSA:
Ordinary (Unclassified) Locations

Description

- Nelson Type CLT self-regulating heater cable is a parallel circuit electric heater strip.
- An irradiation cross-linked conductive polymer core material is extruded over the multi-stranded, tin-plated, 18-gauge copper bus wires.
- The conductive core material increases or decreases its heat output in response to temperature changes.
- Two jackets provide extra dielectric strength, moisture resistance, and protection from impact and abrasion damage.
- A thermoplastic elastomer over jacket is then extruded over the inner jacket.
- A stranded copper braid is installed over the second jacket, providing a continuous ground path.
- A standard option UV stabilized polyolefin over jacket is available to cover the braid for wet applications.

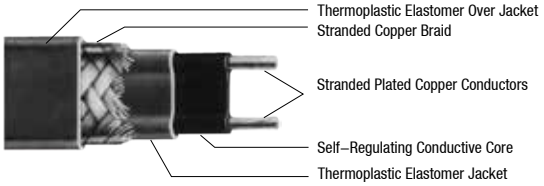

Operating Principle

- The parallel bus wires apply voltage along the entire length of the heater cable.
- The conductive core provides an infinite number of parallel conductive paths permitting the cable to be cut to any length in the field with no dead or cold zones developing.
- The heater cable derives its self-regulating characteristic from the inherent properties of the conductive core material.
- As the core material temperature increases, the number of conductive paths in the core material decrease, automatically decreasing the heat output.
- As the temperature decreases, the number of conductive paths increase, causing the heat output to increase.
- This occurs at every point along the length of the cable, adjusting the power output to the varying conditions along the pipe.
- The self-regulating effect allows the cable to be overlapped without creating hot spots or burnout.
- As the cable self-regulates it heat output, it provides for the efficient use of electric power, producing heat only when and where it is needed, and also limiting the maximum sheath temperature

Application

- Nelson Type CLT self-regulating heater cable is ideal for use in maintaining fluid flow under low ambient conditions.
- Freeze protection and low watt density process temperature systems such as product pipelines, fire protection, process water, dust suppression systems, hot water and structure anti-icing are typical applications for this product.

Accessories

- Nelson PLT and AX Series Connection Kits for Power, Splice, Tee Splice, Powered Splices and End Terminations
- Nelson TA, TH, TE and HC Series Thermostats and Contactors
- Junction Boxes, Tapes and Warning Signs
- Custom Control, Monitoring and Power Panels

Certifications and Compliances

- UL Listed: E33597, E53501
- CSA Standard: CSA C22.2 No. 130-16
- CSA Certified: LR42103
- Other Standards: IEEE 515-2011, IEEE 515.1-2012

© March 2019

Type CLT Self–Regulating Heaters

For use in Ordinary (Unclassified) Locations

UL:
Ordinary (Unclassified) Locations

CSA:
Ordinary (Unclassified) Locations

Performance Rating

Service Voltage	Maximum Maintenance Temperature °C (°F)	Maximum Intermittent Exposure °C (°F)	Watts/m (Watts/ft)
120 240	65 (150)	85 (185)	10 (3)
120 240	65 (150)	85 (185)	16 (5)
120 240	65 (150)	85 (185)	26 (8)

Circuit Breaker Selection

		Maximum Length in Meters (Feet) Vs. Circuit Breaker Size								
		120 Volt				240 Volt				
Watts/m (Watts/ft)	Start–Up Temp. °C (°F)	15A	20A	30A	40A	15A	20A	30A	40A	50A
10 (3)	10 (50)	90 (290)	90 (290)	90 (290)	90 (290)	175 (580)	175 (580)	175 (580)	175 (580)	175 (580)
	-18 (0)	70 (230)	90 (290)	90 (290)	90 (290)	140 (460)	175 (580)	175 (580)	175 (580)	175 (580)
	-29 (-20)	65 (205)	85 (275)	90 (290)	90 (290)	125 (415)	170 (550)	175 (580)	175 (580)	175 (580)
16 (5)	10 (50)	70 (220)	70 (225)	70 (225)	70 (225)	135 (445)	135 (450)	135 (450)	135 (450)	135 (450)
	-18 (0)	50 (160)	65 (215)	70 (225)	70 (225)	100 (320)	130 (425)	135 (450)	135 (450)	135 (450)
	-29 (-20)	45 (145)	60 (195)	70 (225)	70 (225)	90 (290)	115 (385)	135 (450)	135 (450)	135 (450)
26 (8)	10 (50)	45 (150)	55 (180)	55 (180)	55 (180)	95 (305)	110 (360)	110 (360)	110 (360)	110 (360)
	-18 (0)	35 (110)	45 (145)	55 (185)	55 (185)	65 (220)	90 (295)	110 (360)	110 (360)	110 (360)
	-29 (-20)	30 (100)	40 (135)	55 (185)	55 (185)	60 (200)	80 (265)	110 (360)	110 (360)	110 (360)

Notes

1. *Circuit breakers are sized per national electrical codes and are based on start-up temperatures between -29°C (20°F) and 10°C (50°F).*
2. *When using 240 volt product at 208, 220 or 277 volts, use the circuit adjustment factors shown in the Voltage Adjustment Table.*
3. *When using 2 or more heater cables of different wattage ratings in parallel on a single circuit breaker, use the 15A column amperage of 15 amps, divide it by the maximum footage to arrive at an amps/foot figure for each cable. You can then calculate circuit breaker sizes for these combination loads. These amps/foot factors include the 125% sizing factor.*
4. *National electrical codes require ground-fault equipment protection for each branch circuit supplying electric heating equipment. Exceptions to this requirement can be found in the NFPA 70, National Electrical Code.*

© March 2019

Type CLT Self–Regulating Heaters

For use in Ordinary (Unclassified) Locations

UL:
Ordinary (Unclassified) Locations

CSA:
Ordinary (Unclassified) Locations

Power Output Rating

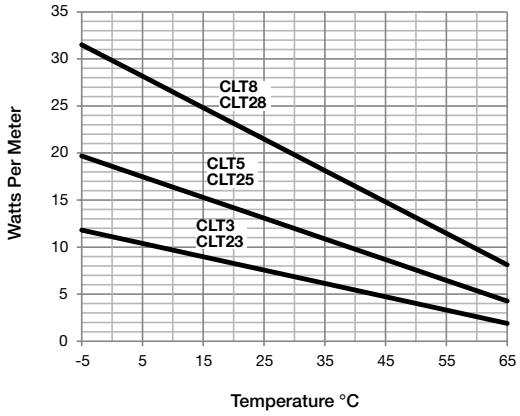

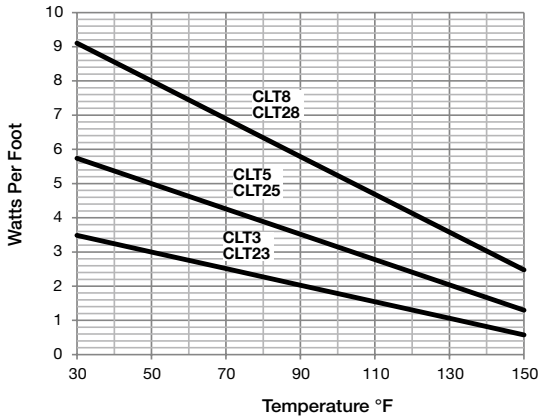

Selection Table

Service Voltage	Maximum Segment Length Meters (Ft)	Description	Catalog Number
120	90 (290)	Copper Braid and Modified Polyolefin	**CLT3-JT**
240	175 (580)		**CLT23-JT**
120	70 (225)	Copper Braid and Modified Polyolefin	**CLT5-JT**
240	135 (450)		**CLT25-JT**
120	55 (180)	Copper Braid and Modified Polyolefin	**CLT8-JT**
240	110 (360)		**CLT28-JT**

Voltage Adjustment ①

Absolute Max Length Meters (Feet)	Adjustment Multiplier 208Vac Power	208Vac Length	220Vac Power	220Vac Length	277 Vac Power	277 Vac Length	Product
175 (580)	0.71	1.04	0.81	1.02	1.34	0.98	CLT23
135 (450)	0.80	1.01	0.87	1.00	1.22	1.02	CLT25
110 (360)	0.87	1.00	0.92	1.00	1.12	1.03	CLT28

① *Use of self-regulating heater products at other than rated voltages require minor adjustments in power and maximum circuit lengths..*

© March 2019

230V Type CLT Self–Regulating Heater Cable

For use in Ordinary (Unclassified) Locations

CE:
Ordinary (Unclassified) Locations

Description

- An irradiation cross-linked conductive polymer core material is extruded over the multi-stranded, tin plated, 0.9 mm^2 copper bus wires.
- The conductive core material increases or decreases its heat output in response to temperature changes.
- Two jackets provide extra dielectric strength, moisture resistance, and protection from impact and abrasion damage.
- A thermoplastic elastomer over jacket is then extruded over the inner jacket.
- A stranded copper braid and thermoplastic elastomer over jacket is supplied on all heaters.
- Maintain Temperature: 65°C
- Maximum Continuous Exposure Temperature: 65°C (continuous power on)
- Maximum Intermittent Exposure Temperature: 85°C (1000 hours cumulative exposure)
- Bus Wire Size: 0.9mm^2 Copper Conductors
- Copper Braid Resistance: Maximum 0.015 Ω /m
- Product Dimensions (Nominal): 6.7 mm x 11.1 mm
- Product Weight: 106.0 g/m
- Minimum Installation Temperature: -40°C
- Minimum Bend Radius: 12.0 mm at -40°C

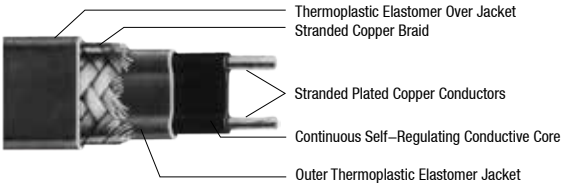

Operating Principle

- The parallel bus wires apply voltage along the entire length of the heater cable.
- The conductive core provides a continuous parallel heating element permitting the cable to be cut to any length in the field with no dead or cold zones developing.
- The heater cable derives its self-regulating characteristic from the inherent properties of the conductive core material.
- As the core material temperature increases, the number of conductive paths in the core material decreases, automatically decreasing the heat output.
- As the temperature decreases, the number of conductive paths increases, causing the heat output to increase.
- This occurs at every point along the length of the cable, adjusting the power output to the varying conditions along the pipe.
- The self-regulating effect allows the cable to be overlapped without creating hot spots or burnout.
- As the cable self-regulates its heat output, it provides for the efficient use of electric power, producing heat only when and where it is needed.

Applications

- Nelson Type CLT self-regulating heater cable is ideal for use in maintaining fluid flow under low ambient conditions.
- Freeze protection and low watt density process temperature systems such as product pipelines, fire protection, process water, dust suppression systems and structure anti-icing are typical applications for this product.

Accessories

- Nelson PLT and EX Series Connection Kits for Power, Splice, Tee Splice, Powered Splices and End Terminations
- Nelson TA and TH Series Thermostats
- Junction Boxes, Tapes and Warning Signs
- Custom Control, Monitoring and Power Panels

Certifications and Compliances

- CE Certified

© March 2019

230V Type CLT Self–Regulating Heater Cable

For use in Ordinary (Unclassified) Locations

CE:
Ordinary (Unclassified) Locations

Performance Rating

Service Voltage	Maximum Maintenance Temperature °C	Maximum Intermittent Exposure °C	Watts/m
230	65	85	9
230	65	85	15
230	65	85	25

Circuit Breaker Selection

Watts/m	Start–Up Temp. °C	Total Heater Length in Meters Vs. Circuit Breaker Size 230 Vac 16A	20A	25A	32A	40A
9	10	250	315	390	500	625
	-5	205	260	325	415	515
	-20	175	220	275	350	440
	-30	160	200	250	320	400
15	10	170	215	265	340	425
	-5	140	175	220	285	355
	-20	120	150	190	240	305
	-30	110	140	175	220	275
25	10	90	110	140	180	225
	-5	75	95	115	150	185
	-20	65	80	100	130	160
	-30	60	75	90	115	145

Notes

1. *The circuit length values shown above are for estimation only.*
2. *Total Heater Length is the total length of heater cable that can be installed on a breaker without tripping either under start-up or operating conditions. Values may indicate that multiple heater segments must be installed on the breaker with none of the segments exceeding the Maximum Segment Lengths as shown in the Performance and Rating table.*
3. *For detailed information on maximum circuit lengths or additional voltages, refer to Nelson Heat Tracing Systems Selection software or contact your local Nelson representative for assistance.*

© March 2019

230V Type CLT Self–Regulating Heater Cable

For use in Ordinary (Unclassified) Locations

CE:
Ordinary (Unclassified) Locations

Power Output Rating

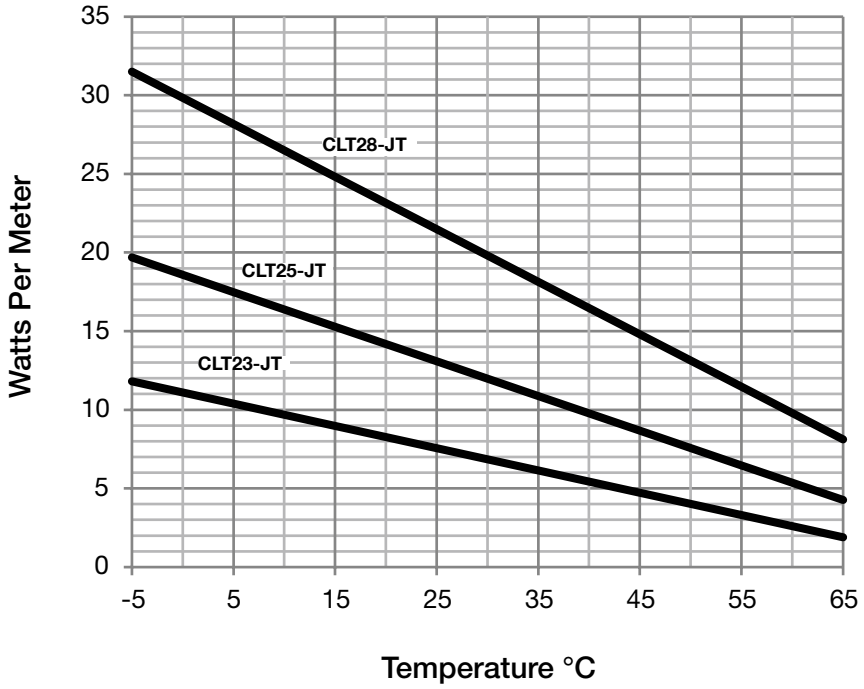

Selection Table

Service Voltage	Maximum Segment Length Meters	Description	Catalog Number
230	175	Copper Braid and Modified Polyolefin	**CLT23-JT**
230	135	Copper Braid and Modified Polyolefin	**CLT25-JT**
230	110	Copper Braid and Modified Polyolefin	**CLT28-JT**

© March 2019

Type PLT Series Connection Kits

UL:
Class I, Division 2, Groups A, B, C, D
Class II, Division 2, Groups F, G

CSA:
Class I, Division 2, Groups B, C, D
Class II, Division 2, Groups E, F, G
Class I, Zone 2, Group IIB+H_2

FM:
Class I, Division 2, Groups A, B, C, D
Class II, Division 1, Groups E, F, G
Class I, Zone 2, Group IIC

Applications

- Approved for use in ordinary (unclassified) and Division 2 hazardous areas when used with approved Nelson heating cables.
- PLT Series connection kits are approved for use with all Nelson CLT, LT, HLT, XLT and NC Series field-fabricated heating cables.

Features

- Non-metallic connection kits
- The PLT-BC Power Connection Kit is suitable for connecting up to two heating cables to customer supplied power wiring–
- Kit Contents:
  - 1 Universal Base, Box Adapter, Sealing Gasket, O-Ring and Locknut
  - 1 Junction Box with Sealing Gasket and Cover
  - 1 Sealing Grommet (Specify Cable Construction ①)
  - 1 Power Termination and Cable End Seal with Adhesive Sealant
  - 3 Power Terminations and 2 Cable End Seals with Adhesive Sealant
  - 1 3-Point Floating Terminal Block
  - 1 Ground Connection Splice
  - 2 Stainless Steel Pipe Clamps (specify pipe size)
- The PLT-BS Splice Connection Kit is designed for connecting two heating cables in an in-line splice configuration.
- Kit Contents:
  - 1 Universal Base, Box Adapter, Sealing Gasket, O-Ring and Locknut
  - 1 Junction Box with Sealing Gasket and Cover
  - 1 Universal Sealing Grommet
  - 2 Power Terminations with Adhesive Sealant
  - 1 3-Point Floating Terminal Block
  - 1 Ground Connection Splice
  - 2 Stainless Steel Pipe Clamps (specify pipe size)
- The PLT-BY Tee Connection Kit is designed for connecting three heating cables in a tee splice configuration.
- Kit Contents:
  - 1 Universal Base, Box Adapter, Sealing Gasket, O-Ring and Locknut
  - 1 Junction Box with Sealing Gasket and Cover
  - 1 Watertight Connection Fitting and Hi-Temp Flexible Tubing
  - 1 Sealing Grommet (Specify Cable Construction) ②
  - 3 Power Terminations and 2 Cable End Seals with Adhesive Sealant
  - 1 3-Point Floating Terminal Block
  - 1 Ground Connection Splice
  - 2 Stainless Steel Pipe Clamps (specify pipe size) ③

Certifications and Compliances

- UL Standard: 50 Ed. 12
- UL Listed: E53501, E49805
- CSA Standard: C22.2 No. 130-16, C22.2 No. 94-R2011, C22.2 No. 213-16
- CSA Certified: LR42103, LR42104
- FM Standard: FM3616: 2011
- FM Approved: JI 1B7A1.AX, JI 3B3A6.AX
- Other Standards: IEEE 515-2011, IEEE 515.1-2012, ANSI/ISA 12.12.01-2015



PLT–BC



PLT–BS



PLT–BY

Notes:
① Selection of -U grommet includes (1) additional power termination and (1) additional end seal for multiple cable entry.
② Power terminations and cable end seals with adhesive sealant
③ Number of cable terminations based on standard usage of tee splice configuration; (3) power terminations and (2) end seals.

© March 2019

Type PLT Series Connection Kits

UL:
Class I, Division 2, Groups A, B, C, D
Class II, Division 2, Groups F, G

CSA:
Class I, Division 2, Groups B, C, D
Class II, Division 2, Groups E, F, G
Class I, Zone 2, Group IIB+H_2

FM:
Class I, Division 2, Groups A, B, C, D
Class II, Division 1, Groups E, F, G
Class I, Zone 2, Group IIC

Nelson PLT Series non-metallic connection kits include all components necessary to complete the installation of our full line of heat tracing cables. The selection tables below allow for the proper specifying of the complete connection kit assembly (example: PLT-BC-J-12).

Catalog Numbering Guide

PLT

Product Family

BC

Specify Kit Configuration
BC - Power Connection
BS - Splice Connection
BY - Tee Connection

J

Specify Cable Construction
B - Braided Heater
J - Over Jacketed Heater
U - Multiple (2) Cable Entry or
Special Heater Constructions

12

Specify Pipe Size ①
3 - 19 – 75 mm (.75 - 3.0 in)
12 - 89 – 305 mm (3.5-12.0 in)
20 - 317 – 508 mm (12.5 - 20.0 in)

Note:
① Suitable for use with any approved industrial enclosure with a maximum wall thickness of .1875" or conduit outlet/junction box with .75" threaded hubs.

© March 2019

Type PLT Series Connection Kits

UL:
Class I, Division 2, Groups A, B, C, D
Class II, Division 2, Groups F, G

CSA:
Class I, Division 2, Groups B, C, D
Class II, Division 2, Groups E, F, G
Class I, Zone 2, Group IIB+H_2

FM:
Class I, Division 2, Groups A, B, C, D
Class II, Division 1, Groups E, F, G
Class I, Zone 2, Group IIC

Applications

- Approved for use in ordinary (unclassified) and Division 2 hazardous areas when used with approved Nelson heating cables.
- PLT Series connection kits are approved for use with all Nelson LT, HLT, XLT, CLT and NC Series field-fabricated heating cables.

Features

- Non-metallic connection kits
- The PLT-LP Connection Kit is suitable for connecting up to two heating cables to customer supplied power wiring or as an in-line splice configuration utilizing a customer supplied junction box. ①
- Kit Contents:
  - 1 Universal Base, Box Adapter, Sealing Gasket and Locknut
  - 1 Sealing Grommet (Specify Cable Construction)
- The PLT-LPM Connection Kit is suitable for connecting up to two heating cables to customer supplied power wiring or as in an in-line splice configuration utilizing a customer supplied junction box.①
  - This kit differs from the PLT-LP in that it also contains molded silicone cable terminations and the standard terminal block.
- Kit Contents:
  - 1 Universal Base, Box Adapter, Sealing Gasket and Locknut
  - 1 Sealing Grommet (Specify Cable Construction ②)
  - 1 Power Termination and Cable End Seal with Adhesive Sealant
  - 1 3-Point Floating Terminal Block
  - 1 Ground Connection Splice
- The PLT-LPS Connection Kit is suitable for connecting up to two heating cables to customer supplied power wiring or as in an in-line splice configuration utilizing a customer supplied junction box.①
  - This kit differs from the PLT-LP in that it also contains shrink tube cable terminations and the standard terminal block.
- Kit Contents:
  - 1 Universal Base, Box Adapter, Sealing Gasket and Locknut
  - 1 Sealing Grommet (Specify Cable Construction ②)
  - 1 Power Termination and Cable End Seal
  - 1 Ground Connection Splice
- The PLT-L Connection Kits are designed as end-of-circuit indicating light assemblies utilizing low temperature LED lamps
- The -L is selectable for 120/208/240/277 Vac operation.
- Kit Contents:
  - 1 Universal Base, Box Adapter, Sealing Gasket and Locknut
  - 1 Junction box with Sealing Gasket and Cover
  - 1 Pilot Light Assembly (Specify Voltage)
  - 1 Sealing Grommet (Specify Cable Construction)
  - 1 Power Termination with Adhesive Sealant
  - 1 Ground Connection Splice
  - 2 Stainless Steel Pipe Clamps (specify pipe size)



PLT–LP



PLT–LPM



PLT–LPS



PLT–L

Certifications and Compliances

- UL Standard: 50 Ed. 12
- UL Listed: E53501, E49805
- CSA Standard: C22.2 No. 130-16, C22.2 No. 94-R2011, C22.2 No. 213-16
- CSA Certified: LR42103, LR42104
- FM Standard: FM3616: 2011
- FM Approved: JI 1B7A1.AX, JI 3B3A6.AX
- Other Standards: IEEE 515-2011, IEEE 515.1-2012, ANSI/ISA 12.12.01-2015

Notes:
① Suitable for use with any approved industrial enclosure with a maximum wall thickness of .1875" or conduit outlet/junction box with .75" threaded hubs.
② Selection of -U grommet includes (1) additional power termination and (1) additional end seal for multiple cable entry.

Visit our website at www.nelsonheaters.com or contact us at United States: (800) 621-1506 | Europe: +33.3.22.54.13.90.
© March 2019
EMERSON

Type PLT Series Connection Kits

UL:
Class I, Division 2, Groups A, B, C, D
Class II, Division 2, Groups F, G

CSA:
Class I, Division 2, Groups B, C, D
Class II, Division 2, Groups E, F, G
Class I, Zone 2, Group IIB+H_2

FM:
Class I, Division 2, Groups A, B, C, D
Class II, Division 1, Groups E, F, G
Class I, Zone 2, Group IIC

Nelson PLT Series non-metallic connection kits include all components necessary to complete the installation of our full line of heat tracing cables. The selection tables below allow for the proper specifying of the complete connection kit assembly (example: PLT - LPM - J-12).

Catalog Numbering Guide

PLT

Product Family

LPM

Specify Kit Configuration

LP - Power Connection w/o Junction Box ①
LPM - Power Connection w/o Junction Box ① w/Molded Terminations
LPS - Power Connection w/o Junction Box ① w/Shrink Terminations
L120 - End-of-Circuit indicating Light - 120 Vac
L208 - End-of-Circuit indicating Light - 208 Vac
L240 - End-of-Circuit indicating Light - 220-240 Vac
L277 - End-of-Circuit indicating Light - 277 Vac

J

Specify Cable Construction

B - Braided Heater
J - Over Jacketed Heater
U - Multiple (2) Cable Entry or Special Heater Constructions

12

Specify Pipe Size ②

3 - 19 – 75 mm (.75 - 3.0 in)
12 - 89 – 305 mm (3.5-12.0 in)
20 - 317 – 508 mm (12.5 - 20.0 in)

Note:
① Suitable for use with any approved industrial enclosure with a maximum wall thickness of .1875" or conduit outlet/junction box with .75" threaded hubs.
② Pipe Strap Selection is available only on PLT-L indicating light assemblies.

© March 2019

Type LT Self–Regulating Heater Cable

For use in Ordinary (Unclassified) and Hazardous (Classified) Locations

UL:
-CB, JT or -J options: Class I, Division 2, Groups A, B, C, D; Class II, Division 2, Groups F, G; Class I, Zone 1, AEx e II

UL:
D1- option: Class I, Division 1, Groups B, C, D; Class II, Division 1, Groups E, F, G; Class III

CSA:
-CB, -JT or -J options: Class I, Division 2, Groups B, C, D; Class II, Division 2, Groups E, F, G ; Class III, Class I, Zone 2, Group IIB+H_2

CSA:
-J option: Class I, Division 1, Groups B, C, D; Class II, Division 1, Groups E, F, G; Class I, Zone 1, Group IIB, Zone 1, Ex e II T6 (T5)

FM:
-CB, -JT or -J options: Class I, Division 2, Groups A, B, C, D; Class II, Division 2, Groups F, G; Class III

FM:
-J option: Class I, Zone 1 AEx e II; Group IIC

Operating Principle

- The parallel bus wires apply voltage along the entire length of the heater cable.
- The conductive core provides an infinite number of parallel conductive paths permitting the cable to be cut to any length in the field with no dead or cold zones developing.
- The heater cable derives its self regulating characteristic from the inherent properties of the conductive core material.
- As the core material temperature increases, the number of conductive paths in the core material decrease, automatically decreasing the heat output.
- As the temperature decreases, the number of conductive paths increase, causing the heat output to increase.
- This occurs at every point along the length of the cable, adjusting the power output to the varying conditions along the pipe.
- The self regulating effect allows the cable to be overlapped without creating hot spots or burnout.
- As the cable self-regulates its heat output, it provides for the efficient use of electric power, producing heat only when and where it is needed, and also limiting the maximum sheath temperature.

Description

- Nelson Type LT self-regulating heater cable is a parallel circuit electric heater strip.
- An irradiation cross-linked conductive polymer core material is extruded over the multi stranded, tin-plated, 16 gauge copper bus wires.
- The conductive core material increases or decreases its heat output in response to temperature changes.
- Two jackets provide extra dielectric strength, moisture resistance, and protection from impact and abrasion damage.
- The inner thermoplastic jacket is extruded over and bonded to the core material.
- A thermoplastic elastomer over jacket is then extruded over the inner jacket.
- A stranded tinned copper metal braid is supplied on all heaters.
- An optional over jacket (fluoropolymer or modified polyolefin) can be specified when the heater cable is to be installed in wet or corrosive environments.
- The base product is supplied with a tinned copper metal braid that may be used in both general applications and in dry, non corrosive hazardous (classified) areas.

Application

- Nelson Type LT self regulating heater cable is ideal for use in maintaining fluid flow under low ambient conditions.
- Freeze protection and low watt density process temperature systems such as product pipelines, fire protection, process water, dust suppression systems, lube oil, condensate return, domestic hot water ① and structure anti-icing are typical applications for this product.

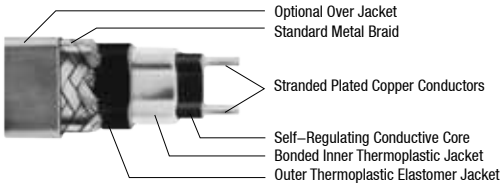

Accessories

- Nelson AX Series Connection Kits for Power, Splice, Tee Splice, Powered Splices and End Terminations
- Nelson HASK Series Division 1 Connection Kits for Power, Splice, Tee Splice and End Terminations
- Nelson EX Series Zone 1 Connection Kits for Power, Splice, Tee Splice and End Terminations
- Nelson TA, TH, TE and HC Series Thermostats and Contactors
- Junction Boxes, Tapes and Warning Signs
- Custom Control, Monitoring and Power Panels

Certifications and Compliances

- UL Standard: 50 Ed. 12
- UL Listed: E53501, E49805
- CSA Standard: C22.2 No. 130-16, C22.2 No. 94-R2011, C22.2 No. 213-16
- CSA Certified: LR42103, LR42104
- FM Standard: FM3616: 2011
- FM Approved: JI 1B7A1.AX, JI 3B3A6.AX
- Other Standards: IEEE 515-2011, IEEE 515.1-2012, ANSI/ISA 12.12.01-2015

① *LT-A, B, C, D self-regulating cable approved for domestic hot water maintenance applications.*

© March 2019

Type LT Self–Regulating Heater Cable

For use in Ordinary (Unclassified) and Hazardous (Classified) Locations

UL:	UL:	CSA:	CSA:	FM:	FM:
-CB, JT or -J options: Class I, Division 2, Groups A, B, C, D; Class II, Division 2, Groups F, G; Class I, Zone 1, AEx e II	D1- option: Class I, Division 1, Groups B, C, D; Class II, Division 1, Groups E, F, G; Class III	-CB, -JT or -J options: Class I, Division 2, Groups B, C, D; Class II, Division 2, Groups E, F, G ; Class III, Class I, Zone 2, Group IIB+H_2	-J option: Class I, Division 1, Groups B, C, D; Class II, Division 1, Groups E, F, G; Class I, Zone 1, Group IIB, Zone 1, Ex e II T6 (T5)	-CB, -JT or -J options: Class I, Division 2, Groups A, B, C, D; Class II, Division 2, Groups F, G; Class III	-J option: Class I, Zone 1 AEx e II; Group IIC

Performance Rating

Service Voltage	Maximum Maintenance Temperature °C (°F)	Maximum Intermittent Exposure °C (°F)	Watts/m (Watts/ft)	T–Rating ①
120	65 (150)	85 (185)	10 (3)	T6
240				
120	65 (150)	85 (185)	16 (5)	T6
240				
120	65 (150)	85 (185)	26 (8)	T5
240				
120	65 (150)	85 (185)	33 (10)	T5
240				

Circuit Breaker Selection

		Maximum Length in Meters (Feet) Vs. Circuit Breaker Size								
		120 Vac				240 Vac				
Watts/m (Watts/ft)	Start–Up Temp. °C (°F)	15A	20A	30A	40A	15A	20A	30A	40A	50A
10 (3)	10 (50)	100 (320)	115 (370)	115 (370)	115 (370)	190 (630)	225 (740)	225 (740)	225 (740)	225 (740)
	-18 (0)	65 (220)	90 (290)	115 (370)	115 (370)	140 (465)	175 (580)	225 (740)	225 (740)	225 (740)
	-29 (-20)	60 (195)	80 (260)	115 (370)	115 (370)	115 (385)	155 (515)	225 (740)	225 (740)	225 (740)
16 (5)	10 (50)	65 (220)	85 (280)	85 (280)	85 (280)	135 (445)	170 (560)	170 (560)	170 (560)	170 (560)
	-18 (0)	45 (150)	60 (200)	85 (280)	85 (280)	90 (300)	120 (400)	170 (560)	170 (560)	170 (560)
	-29 (-20)	40 (135)	55 (175)	80 (265)	85 (280)	80 (265)	105 (350)	160 (525)	170 (560)	170 (560)
26 (8)	10 (50)	45 (150)	65 (205)	70 (225)	70 (225)	90 (300)	120 (400)	135 (450)	135 (450)	135 (450)
	-18 (0)	30 (105)	45 (140)	65 (215)	70 (225)	65 (210)	85 (285)	130 (425)	135 (450)	135 (450)
	-29 (-20)	30 (95)	40 (125)	60 (190)	70 (225)	60 (190)	80 (255)	115 (380)	135 (450)	135 (450)
33 (10)	10 (50)	40 (125)	50 (165)	60 (200)	60 (200)	75 (250)	100 (335)	120 (400)	120 (400)	120 (400)
	-18 (0)	25 (90)	40 (125)	55 (185)	60 (200)	55 (185)	75 (245)	110 (365)	120 (400)	120 (400)
	-29 (-20)	25 (85)	35 (110)	50 (165)	60 (200)	50 (165)	65 (220)	100 (330)	120 (400)	120 (400)

① *Electrical equipment T rating codes define the maximum surface temperature that equipment will reach. It is used in hazardous (classified) area applications.*

Notes

1. *Circuit breakers are sized per national electrical codes.*
2. *When using 240 volt product at 208, 220 or 277 volts, use the circuit adjustment factors shown in the Voltage Adjustment Table.*
3. *When using 2 or more heater cables of different wattage ratings in parallel on a single circuit breaker, use the 15A column amperage of 15 amps, divide it by the maximum footage to arrive at an amps/foot figure for each cable. You can then calculate circuit breaker sizes for these combination loads. These amps foot factors include the 125% sizing factor.*
4. *National electrical codes require ground-fault equipment protection for each branch circuit supplying electric heating equipment. Exceptions to this requirement can be found in the NFPA 70, National Electrical Code.*
5. *Heater cables with D1 optional construction require the use of ground fault interrupter/ground leakage device with a trip setting no greater than 30mA.*

© March 2019

Type LT Self–Regulating Heater Cable

For use in Ordinary (Unclassified) and Hazardous (Classified) Locations

UL:	UL:	CSA:	CSA:	FM:	FM:
-CB, JT or -J options: Class I, Division 2, Groups A, B, C, D; Class II, Division 2, Groups F, G; Class I, Zone 1, AEx e II	*D1- option: Class I, Division 1, Groups B, C, D; Class II, Division 1, Groups E, F, G; Class III*	*-CB, -JT or -J options: Class I, Division 2, Groups B, C, D; Class II, Division 2, Groups E, F, G ; Class III, Class I, Zone 2, Group IIB+H_2*	*-J option: Class I, Division 1, Groups B, C, D; Class II, Division 1, Groups E, F, G; Class I, Zone 1, Group IIB, Zone 1, Ex e II T6 (T5)*	*-CB, -JT or -J options: Class I, Division 2, Groups A, B, C, D; Class II, Division 2, Groups F, G; Class III*	*-J option: Class I, Zone 1 AEx e II; Group IIC*

Power Output Rating

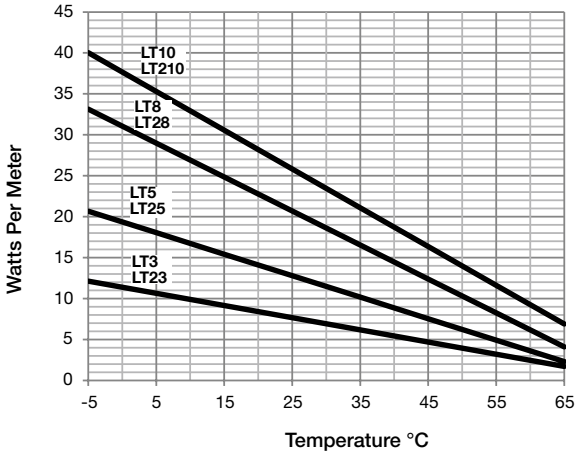

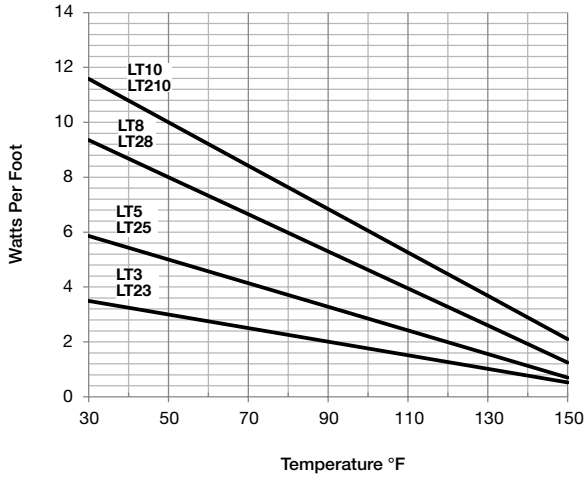

© March 2019

Type LT Self–Regulating Heater Cable

For use in Ordinary (Unclassified) and Hazardous (Classified) Locations

UL:	UL:	CSA:	CSA:	FM:	FM:
-CB, JT or -J options: Class I, Division 2, Groups A, B, C, D; Class II, Division 2, Groups F, G; Class I, Zone 1, AEx e II	*D1- option: Class I, Division 1, Groups B, C, D; Class II, Division 1, Groups E, F, G; Class III*	*-CB, -JT or -J options: Class I, Division 2, Groups B, C, D; Class II, Division 2, Groups E, F, G ; Class III, Class I, Zone 2, Group IIB+H_2*	*-J option: Class I, Division 1, Groups B, C, D; Class II, Division 1, Groups E, F, G; Class I, Zone 1, Group IIB, Zone 1, Ex e II T6 (T5)*	*-CB, -JT or -J options: Class I, Division 2, Groups A, B, C, D; Class II, Division 2, Groups F, G; Class III*	*-J option: Class I, Zone 1 AEx e II; Group IIC*

Selection Table

Service Voltage	Maximum Segment Length Meters (Feet)	Description	Catalog Number
120	115 (370)	Tinned Copper Braid	**LT3-CB**
		Tinned Copper Braid and Fluoropolymer	**LT3-J**
		Tinned Copper Braid and Modified Polyolefin	**LT3-JT**
		Class I, Division 1, Groups B, C and D	**D1-LT3**
240	225 (740)	Tinned Copper Braid	**LT23-CB**
		Tinned Copper Braid and Fluoropolymer	**LT23-J**
		Tinned Copper Braid and Modified Polyolefin	**LT23-JT**
		Class I, Division 1, Groups B, C and D	**D1-LT23**
120	85 (280)	Tinned Copper Braid	**LT5-CB**
		Tinned Copper Braid and Fluoropolymer	**LT5-J**
		Tinned Copper Braid and Modified Polyolefin	**LT5-JT**
		Class I, Division 1, Groups B, C and D	**D1-LT5**
240	170 (560)	Tinned Copper Braid	**LT25-CB**
		Tinned Copper Braid and Fluoropolymer	**LT25-J**
		Tinned Copper Braid and Modified Polyolefin	**LT25-JT**
		Class I, Division 1, Groups B, C and D	**D1-LT25**
120	70 (225)	Tinned Copper Braid	**LT8-CB**
		Tinned Copper Braid and Fluoropolymer	**LT8-J**
		Tinned Copper Braid and Modified Polyolefin	**LT8-JT**
		Class I, Division 1, Groups B, C and D	**D1-LT8**
240	135 (450)	Tinned Copper Braid	**LT28-CB**
		Tinned Copper Braid and Fluoropolymer	**LT28-J**
		Tinned Copper Braid and Modified Polyolefin	**LT28-JT**
		Class I, Division 1, Groups B, C and D	**D1-LT28**
120	60 (200)	Tinned Copper Braid	**LT10-CB**
		Tinned Copper Braid and Fluoropolymer	**LT10-J**
		Tinned Copper Braid and Modified Polyolefin	**LT10-JT**
		Class I, Division 1, Groups B, C and D	**D1-LT10**
240	120 (400)	Tinned Copper Braid	**LT210-CB**
		Tinned Copper Braid and Fluoropolymer	**LT210-J**
		Tinned Copper Braid and Modified Polyolefin	**LT210-JT**
		Class I, Division 1, Groups B, C and D	**D1-LT210**

© March 2019

Type LT Self–Regulating Heater Cable

For use in Ordinary (Unclassified) and Hazardous (Classified) Locations

UL:	UL:	CSA:	CSA:	FM:	FM:
-CB, JT or -J options: Class I, Division 2, Groups A, B, C, D; Class II, Division 2, Groups F, G; Class I, Zone 1, AEx e II	*D1- option: Class I, Division 1, Groups B, C, D; Class II, Division 1, Groups E, F, G; Class III*	*-CB, -JT or -J options: Class I, Division 2, Groups B, C, D; Class II, Division 2, Groups E, F, G ; Class III, Class I, Zone 2, Group IIB+H_2*	*-J option: Class I, Division 1, Groups B, C, D; Class II, Division 1, Groups E, F, G; Class I, Zone 1, Group IIB, Zone 1, Ex e II T6 (T5)*	*-CB, -JT or -J options: Class I, Division 2, Groups A, B, C, D; Class II, Division 2, Groups F, G; Class III*	*-J option: Class I, Zone 1 AEx e II; Group IIC*

Voltage Adjustment ①

Absolute Max Length Meters (Feet)	Adjustment Multiplier						
	208 Vac		220 Vac		277 Vac		
	Power	Length	Power	Length	Power	Length	Product
225 (740)	0.76	0.93	0.85	0.96	1.27	1.07	LT23
170 (560)	0.79	0.93	0.87	0.96	1.24	1.07	LT25
135 (450)	0.84	0.93	0.90	0.96	1.19	1.08	LT28
120 (400)	0.86	0.93	0.92	0.96	1.16	1.09	LT210

① *Use of self-regulating heater products at other than rated voltages require minor adjustments in power and maximum circuit lengths..*

© March 2019

Type HLT Self–Regulating Heater Cable

For use in Ordinary (Unclassified) and Hazardous (Classified) Locations

UL:	UL:	CSA:	CSA:	FM:	FM:	FM:
-CB or -J options: Class I, Division 2, Groups A, B, C, D; Class II, Division 2, Groups F, G; Class I, Zone 1, AEx e II	*D1- option: Class I, Division 1, Groups B, C, D; Class II, Division 1, Groups E, F, G; Class III*	*-CB or -J options: Class I, Division 2, Groups B, C, D; Class II, Division 2, Groups E, F, G; Class III, Class I, Zone 2, Group IIB+H_2*	*-J option: Class I, Division 1, Groups B, C, D; Class II, Division 1, Groups E, F, G; Class I, Zone 1, Group IIB, Zone 1, Ex e II T3*	*-CB or -J options: Class I, Division 2, Groups A, B, C, D; Class II, Division 2, Groups F, G; Class III*	*-J option: Class I, Zone 1 AEx e II; Group IIC*	*D1- option: Class I, Division 1, Groups B, C, D; Class I, Zone 1; Group IIB*

Description

- Nelson Type HLT self-regulating heater cable is a parallel circuit electric heater strip.
- A conductive fluoropolymer core material is extruded over the multi-stranded, nickel-plated, 16-gauge copper bus wires.
- A fluoropolymer jacket provides excellent dielectric strength, moisture resistance, protection from impact and abrasion damage, and a wide range of chemical resistance.
- A stranded tinned copper metal braid is supplied on all heaters.
- An optional fluoropolymer over jacket can be specified when the heater cable is to be installed in wet or corrosive environments.
- The base product is supplied with a tinned copper metal braid that may be used in both general applications and in dry, non-corrosive hazardous (classified) areas.

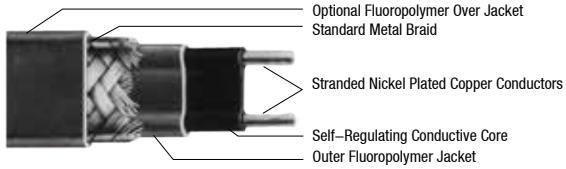

Operating Principle

- The parallel bus wires apply voltage along the entire length of the heater cable.
- The conductive core provides a continuous parallel heating element permitting the cable to be cut to any length in the field with no dead or cold zones developing.
- The heater cable derives its self-regulating characteristic from the inherent properties of the conductive core material.
- As the core material temperature increases, the number of conductive paths in the core material decreases, automatically decreasing the heat output.
- As the temperature decreases, the number of conductive paths increases, causing the heat output to increase.
- This occurs at every point along the length of the cable, adjusting the power output to the varying conditions along the pipe.
- The self-regulating effect allows the cable to be overlapped without creating hot spots or burnout.
- As the cable self-regulates its heat output, it limits the maximum sheath temperature, while also providing useful power for process temperature maintenance.

Application

- Nelson Type HLT self-regulating heater cable is ideal for maintaining flow over a wide range of operating temperatures.
- The product is used for available for freeze protection of periodically steam (200 psig) cleaned pipes and temperature maintenance for 121°C (250°F) or lower processes.
- Typical applications include hydrocarbon and chemical product piping.

Accessories

- Nelson AX Series Connection Kits for Power, Splice, Tee Splice, Powered Splices and End Terminations
- Nelson HASK Series Division 1 Connection Kits for Power, Splice, Tee Splice and End Terminations
- Nelson EX Series Zone 1 Connection Kits for Power, Splice, Tee Splice, Powered Splices and End Terminations
- Nelson TA, TH, TE and HC Series Thermostats and Contactors
- Junction Boxes, Tapes and Warning Signs
- Custom Control, Monitoring and Power Panels

Certifications and Compliances

- UL Listed: E33597, E53501, E49805
- CSA Standard: C22.2 No. 130-16
- CSA Certified: LR42103, LR42104
- FM Approved: JI 5D0A4.AX, JI 3B3A6.A6, JI 3B6A4.AX
- Other Standards: IEEE 515-2011, IEEE 515.1-2012

© March 2019

Type HLT Self–Regulating Heater Cable

For use in Ordinary (Unclassified) and Hazardous (Classified) Locations

UL:	*UL:*	*CSA:*	*CSA:*	*FM:*	*FM:*	*FM:*
-CB or -J options: Class I, Division 2, Groups A, B, C, D; Class II, Division 2, Groups F, G; Class I, Zone 1, AEx e II	*D1- option: Class I, Division 1, Groups B, C, D; Class II, Division 1, Groups E, F, G; Class III*	*-CB or -J options: Class I, Division 2, Groups B, C, D; Class II, Division 2, Groups E, F, G; Class III, Class I, Zone 2, Group IIB+H_2*	*-J option: Class I, Division 1, Groups B, C, D; Class II, Division 1, Groups E, F, G; Class I, Zone 1, Group IIB, Zone 1, Ex e II T3*	*-CB or -J options: Class I, Division 2, Groups A, B, C, D; Class II, Division 2, Groups F, G; Class III*	*-J option: Class I, Zone 1 AEx e II; Group IIC*	*D1- option: Class I, Division 1, Groups B, C, D; Class I, Zone 1; Group IIB*

Performance Rating

Service Voltage	Maximum Maintenance Temperature °C (°F)	Maximum Intermittent Exposure °C (°F)	T–Rating ①	Watts/m (Watts/ft)
120 / 240	120 (250)	215 (420)	T3 (T3)	16 (5)
120 / 240	120 (250)	215 (420)	T3 (T3)	33 (10)
120 / 240	120 (250)	215 (420)	T3 (T3)	49 (15)
120 / 240	120 (250)	215 (420)	T3 (T2D)	66 (20)

① *Electrical equipment T rating codes define the maximum surface temperature that equipment will reach. It is used in hazardous (classified) area applications.*

© March 2019

Type HLT Self–Regulating Heater Cable

For use in Ordinary (Unclassified) and Hazardous (Classified) Locations

UL:	UL:	CSA:	CSA:	FM:	FM:	FM:
-CB or -J options: Class I, Division 2, Groups A, B, C, D; Class II, Division 2, Groups F, G; Class I, Zone 1, AEx e II	D1- option: Class I, Division 1, Groups B, C, D; Class II, Division 1, Groups E, F, G; Class III	-CB or -J options: Class I, Division 2, Groups B, C, D; Class II, Division 2, Groups E, F, G; Class III, Class I, Zone 2, Group IIB+H_2	-J option: Class I, Division 1, Groups B, C, D; Class II, Division 1, Groups E, F, G; Class I, Zone 1, Group IIB, Zone 1, Ex e II T3	-CB or -J options: Class I, Division 2, Groups A, B, C, D; Class II, Division 2, Groups F, G; Class III	-J option: Class I, Zone 1 AEx e II; Group IIC	D1- option: Class I, Division 1, Groups B, C, D; Class I, Zone 1; Group IIB

Circuit Breaker Selection

Watts/m (Watts/ft)	Start–Up Temp. °C (°F)	Maximum Length in Meters (Feet) Vs. Circuit Breaker Size								
		120 Vac				240 Vac				
		15A	20A	30A	40A	15A	20A	30A	40A	50A
16 (5)	10 (50)	65 (220)	85 (280)	85 (280)	85 (280)	135 (445)	170 (560)	170 (560)	170 (560)	170 (560)
	-18 (0)	60 (195)	80 (260)	85 (280)	85 (280)	115 (380)	155 (510)	170 (560)	170 (560)	170 (560)
	-29 (-20)	55 (185)	75 (245)	85 (280)	85 (280)	115 (370)	150 (490)	170 (560)	170 (560)	170 (560)
33 (10)	10 (50)	40 (125)	50 (170)	60 (195)	60 (195)	75 (250)	100 (335)	120 (390)	120 (390)	120 (390)
	-18 (0)	35 (110)	45 (145)	60 (195)	60 (195)	65 (220)	90 (295)	120 (390)	120 (390)	120 (390)
	-29 (-20)	30 (105)	45 (140)	60 (195)	60 (195)	65 (210)	85 (280)	120 (390)	120 (390)	120 (390)
49 (15)	10 (50)	25 (85)	35 (115)	40 (135)	40 (135)	55 (175)	70 (230)	80 (270)	80 (270)	80 (270)
	-18 (0)	25 (80)	30 (105)	40 (135)	40 (135)	50 (160)	65 (215)	80 (270)	80 (270)	80 (270)
	-29 (-20)	25 (75)	30 (100)	40 (135)	40 (135)	45 (150)	60 (200)	80 (270)	80 (270)	80 (270)
66 (20)	10 (50)	20 (65)	25 (90)	30 (105)	30 (105)	40 (135)	55 (180)	65 (210)	65 (210)	65 (210)
	-18 (0)	20 (60)	25 (80)	30 (105)	30 (105)	35 (120)	50 (165)	65 (210)	65 (210)	65 (210)
	-29 (-20)	20 (60)	25 (80)	30 (105)	30 (105)	35 (120)	45 (155)	65 (210)	65 (210)	65 (210)

Notes

1. *Circuit breakers are sized per national electrical codes and are based on start-up temperatures between -29°C (+20°F) and +10°C (+50°F).*
2. *When using 240 volt product at 208, 220 or 277 volts, use the circuit adjustment factors shown in the Voltage Adjustment Table.*
3. *When using 2 or more heater cables of different wattage ratings in parallel on a single circuit breaker, use the 15A column amperage of 15 amps, divide it by the maximum footage to arrive at an amps/foot figure for each cable. You can then calculate circuit breaker sizes for these combination loads. These amps/foot factors include the 125% sizing factor.*
4. *National electrical codes require ground-fault equipment protection for each branch circuit supplying electric heating equipment. Exceptions to this requirement can be found in the NFPA 70, National Electrical Code. .*
5. *Heater cables with D1- optional construction require the use of a ground fault interrupter/ground leakage device with a trip setting no greater than 30mA.*

© March 2019

Type HLT Self–Regulating Heater Cable

For use in Ordinary (Unclassified) and Hazardous (Classified) Locations

UL:	*UL:*	*CSA:*	*CSA:*	*FM:*	*FM:*	*FM:*
-CB or -J options: Class I, Division 2, Groups A, B, C, D; Class II, Division 2, Groups F, G; Class I, Zone 1, AEx e II	*D1- option: Class I, Division 1, Groups B, C, D; Class II, Division 1, Groups E, F, G; Class III*	*-CB or -J options: Class I, Division 2, Groups B, C, D; Class II, Division 2, Groups E, F, G; Class III, Class I, Zone 2, Group IIB+H_2*	*-J option: Class I, Division 1, Groups B, C, D; Class II, Division 1, Groups E, F, G; Class I, Zone 1, Group IIB, Zone 1, Ex e II T3*	*-CB or -J options: Class I, Division 2, Groups A, B, C, D; Class II, Division 2, Groups F, G; Class III*	*-J option: Class I, Zone 1 AEx e II; Group IIC*	*D1- option: Class I, Division 1, Groups B, C, D; Class I, Zone 1; Group IIB*

Power Output Rating

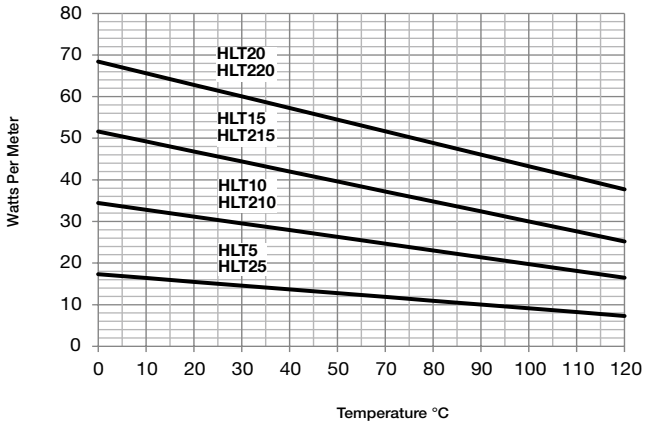

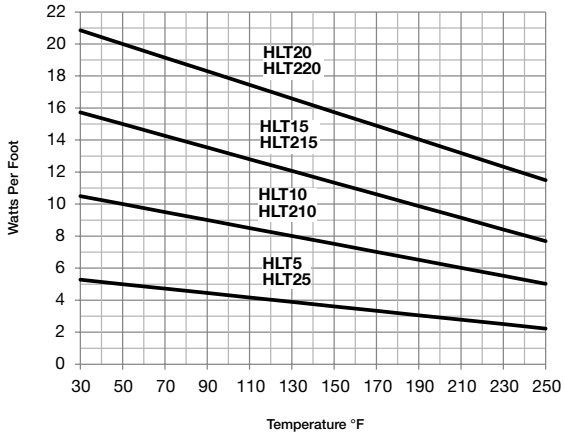

© March 2019

Type HLT Self–Regulating Heater Cable

For use in Ordinary (Unclassified) and Hazardous (Classified) Locations

UL:	UL:	CSA:	CSA:	FM:	FM:	FM:
-CB or -J options: Class I, Division 2, Groups A, B, C, D; Class II, Division 2, Groups F, G; Class I, Zone 1, AEx e II	*D1- option: Class I, Division 1, Groups B, C, D; Class II, Division 1, Groups E, F, G; Class III*	*-CB or -J options: Class I, Division 2, Groups B, C, D; Class II, Division 2, Groups E, F, G; Class III, Class I, Zone 2, Group IIB+H_2*	*-J option: Class I, Division 1, Groups B, C, D; Class II, Division 1, Groups E, F, G; Class I, Zone 1, Group IIB, Zone 1, Ex e II T3*	*-CB or -J options: Class I, Division 2, Groups A, B, C, D; Class II, Division 2, Groups F, G; Class III*	*-J option: Class I, Zone 1 AEx e II; Group IIC*	*D1- option: Class I, Division 1, Groups B, C, D; Class I, Zone 1; Group IIB*

Selection Table

Service Voltage	Maximum Segment Length Meters (Ft)	Description	Catalog Number
120	85 (280)	Tinned Copper Braid	**HLT5-CB**
		Tinned Copper Braid and Fluoropolymer	**HLT5-J**
		Class I, Division 1, Groups B, C and D	**D1-HLT5**
240	170 (560)	Tinned Copper Braid	**HLT25-CB**
		Tinned Copper Braid and Fluoropolymer	**HLT25-J**
		Class I, Division 1, Groups B, C and D	**D1-HLT25**
120	60 (195)	Tinned Copper Braid	**HLT10-CB**
		Tinned Copper Braid and Fluoropolymer	**HLT10-J**
		Class I, Division 1, Groups B, C and D	**D1-HLT10**
240	120 (390)	Tinned Copper Braid	**HLT210-CB**
		Tinned Copper Braid and Fluoropolymer	**HLT210-J**
		Class I, Division 1, Groups B, C and D	**D1-HLT210**
120	40 (135)	Tinned Copper Braid	**HLT15-CB**
		Tinned Copper Braid and Fluoropolymer	**HLT15-J**
		Class I, Division 1, Groups B, C and D	**D1-HLT15**
240	80 (270)	Tinned Copper Braid	**HLT215-CB**
		Tinned Copper Braid and Fluoropolymer	**HLT215-J**
		Class I, Division 1, Groups B, C and D	**D1-HLT215**
120	30 (105)	Tinned Copper Braid	**HLT20-CB**
		Tinned Copper Braid and Fluoropolymer	**HLT20-J**
		Class I, Division 1, Groups B, C and D	**D1-HLT20**
240	65 (210)	Tinned Copper Braid	**HLT220-CB**
		Tinned Copper Braid and Fluoropolymer	**HLT220-J**
		Class I, Division 1, Groups B, C and D	**D1-HLT220**

Voltage Adjustment ①

Absolute Max Length Meters (Feet)	Adjustment Multiplier 208 Vac Power	208 Vac Length	220 Vac Power	220 Vac Length	277 Vac Power	277 Vac Length	Product
170 (560)	0.76	0.93	0.85	0.96	1.29	1.07	HLT25
120 (390)	0.80	0.93	0.88	0.96	1.23	1.07	HLT210
80 (270)	0.83	0.93	0.89	0.96	1.19	1.02	HLT215
65 (210)	0.88	I.00	0.93	1.00	1.15	1.00	HLT220

① *Use of self-regulating heater products at other than rated voltages require minor adjustments in power and maximum circuit lengths..*

© March 2019

Type XLT Self–Regulating Heater Cable

For use in Ordinary (Unclassified) and Hazardous (Classified) Locations

UL:	UL:	CSA:	CSA:	FM:	FM:	FM:
-CB or -J options: Class I, Division 2, Groups A, B, C, D; Class II, Division 2, Groups F, G; Class I, Zone 1, AEx e II	*D1- option: Class I, Division 1, Groups B, C, D; Class II, Division 1, Groups E, F, G; Class III*	*-CB or -J options: Class I, Division 2, Groups B, C, D; Class II, Division 2, Groups E, F, G; Class III, Class I, Zone 2, Group IIB+H_2*	*-J option: Class I, Division 1, Groups B, C, D; Class II, Division 1, Groups E, F, G; Class I, Zone 1, Group IIB, Zone 1, Ex e II T3*	*-CB or -J options: Class I, Division 2, Groups A, B, C, D; Class II, Division 2, Groups F, G; Class III*	*-J option: Class I, Zone 1 AEx e II; Group IIC*	*D1- option: Class I, Division 1, Groups B, C, D; Class I, Zone 1; Group IIB*

Description

- Nelson Type XLT self-regulating heater cable is a parallel circuit electric heater strip.
- A conductive fluoropolymer core material is extruded over the multi-stranded, nickel-plated, 14-gauge copper bus wires.
- A fluoropolymer jacket provides excellent dielectric strength, moisture resistance, protection from impact and abrasion damage, and a wide range of chemical resistance.
- A stranded tinned copper metal braid is supplied on all heaters.
- An optional fluoropolymer over jacket can be specified when the heater cable is to be installed in wet or corrosive environments.
- The base product is supplied with a tinned copper metal braid that may be used in both general applications and in dry, non-corrosive hazardous (classified) areas.

Operating Principle

- The parallel bus wires apply voltage along the entire length of the heater cable.
- The conductive core provides a continuous parallel heating element permitting the cable to be cut to any length in the field with no dead or cold zones developing.
- The heater cable derives its self-regulating characteristic from the inherent properties of the conductive core material.
- As the core material temperature increases, the number of conductive paths in the core material decreases, automatically decreasing the heat output.
- As the temperature decreases, the number of conductive paths increases, causing the heat output to increase.
- This occurs at every point along the length of the cable, adjusting the power output to the varying conditions along the pipe.
- The self-regulating effect allows the cable to be overlapped without creating hot spots or burnout.
- As the cable self-regulates its heat output, it limits the maximum sheath temperature, while also providing useful power for process temperature maintenance.

Application

- Nelson Type XLT self-regulating heater cable is ideal for maintaining flow over a wide range of operating temperatures.
- The product is used for freeze protection of periodically steam (420 psig) cleaned pipes and temperature maintenance for 150°C (300°F) or lower processes.
- Typical applications include hydrocarbon and chemical product piping.

Accessories

- Nelson AX Series Connection Kits for Power, Splice, Tee Splice, Powered Splices and End Terminations
- Nelson HASK Series Division 1 Connection Kits for Power, Splice, Tee Splice and End Terminations
- Nelson EX Series Zone 1 Connection Kits for Power, Splice, Tee Splice, Powered Splices and End Terminations
- Nelson TA, TH, TE and HC Series Thermostats and Contactors
- Junction Boxes, Tapes and Warning Signs
- Custom Control, Monitoring and Power Panels

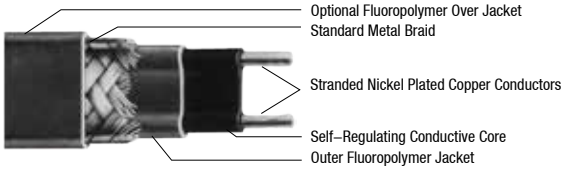

Certifications and Compliances

- UL Listed: E33597, E53501, E49805
- CSA Standard: C22.2 No. 130-16
- CSA Certified: LR42103, LR42104
- FM Approved: JI 5D0A4.AX, JI 3B3A6.A6, JI 3B6A4.AX
- Other Standards: IEEE 515-2011, IEEE 515.1-2012

© March 2019

Type XLT Self–Regulating Heater Cable

For use in Ordinary (Unclassified) and Hazardous (Classified) Locations

UL:	UL:	CSA:	CSA:	FM:	FM:	FM:
-CB or -J options: Class I, Division 2, Groups A, B, C, D; Class II, Division 2, Groups F, G; Class I, Zone 1, AEx e II	D1- option: Class I, Division 1, Groups B, C, D; Class II, Division 1, Groups E, F, G; Class III	-CB or -J options: Class I, Division 2, Groups B, C, D; Class II, Division 2, Groups E, F, G; Class III, Class I, Zone 2, Group IIB+H_2	-J option: Class I, Division 1, Groups B, C, D; Class II, Division 1, Groups E, F, G; Class I, Zone 1, Group IIB, Zone 1, Ex e II T3	-CB or -J options: Class I, Division 2, Groups A, B, C, D; Class II, Division 2, Groups F, G; Class III	-J option: Class I, Zone 1 AEx e II; Group IIC	D1- option: Class I, Division 1, Groups B, C, D; Class I, Zone 1; Group IIB

Performance Rating

Service Voltage	Maximum Maintenance Temperature °C (°F)	Maximum Intermittent Exposure °C (°F)	T–Rating ①	Watts/m (Watts/ft)
120	150 (300)	230 (450)	T3 (T3)	16 (5)
240				
120	150 (300)	230 (450)	T3 (T3)	33 (10)
240				
120	150 (300)	230 (450)	T3 (T3)	49 (15)
240				
120	150 (300)	230 (450)	T3 (T3)	66 (20)
240				

Circuit Breaker Selection

		Maximum Length in Meters (Feet) Vs. Circuit Breaker Size								
		120 Volt				240 Volt				
Watts/m (Watts/ft)	Start–Up Temp. °C (°F)	15A	20A	30A	40A	15A	20A	30A	40A	50A
16 (5)	10 (50)	65 (220)	90 (295)	110 (365)	110 (365)	135 (445)	180 (595)	220 (725)	220 (725)	220 (725)
	-18 (0)	60 (195)	80 (260)	110 (365)	110 (365)	115 (380)	155 (510)	220 (725)	220 (725)	220 (725)
	-29 (-20)	55 (185)	75 (245)	110 (365)	110 (365)	115 (370)	150 (490)	220 (725)	220 (725)	220 (725)
33 (10)	10 (50)	40 (125)	50 (170)	75 (250)	80 (255)	75 (250)	100 (335)	150 (500)	155 (515)	155 (515)
	-18 (0)	35 (110)	45 (145)	65 (220)	80 (255)	65 (220)	90 (295)	135 (440)	155 (515)	155 (515)
	-29 (-20)	30 (105)	45 (140)	65 (210)	80 (255)	65 (210)	85 (280)	130 (420)	155 (515)	155 (515)
49 (15)	10 (50)	25 (85)	35 (115)	55 (175)	60 (195)	55 (175)	70 (230)	105 (350)	120 (390)	120 (390)
	-18 (0)	25 (80)	30 (105)	45 (155)	60 (195)	50 (160)	65 (215)	100 (320)	120 (390)	120 (390)
	-29 (-20)	25 (75)	30 (100)	45 (150)	60 (195)	45 (150)	60 (200)	90 (300)	120 (390)	120 (390)
66 (20)	10 (50)	20 (65)	25 (90)	40 (135)	45 (150)	40 (135)	55 (180)	80 (265)	90 (300)	90 (300)
	-18 (0)	20 (60)	25 (80)	35 (120)	45 (150)	35 (120)	50 (165)	75 (245)	90 (300)	90 (300)
	-29 (-20)	20 (60)	25 (80)	35 (120)	45 (150)	35 (120)	45 (155)	70 (235)	90 (300)	90 (300)

① Electrical equipment T rating codes define the maximum surface temperature that equipment will reach. It is used in hazardous (classified) area applications.

Notes

1. *Circuit breakers are sized per national electrical codes and are based on start-up temperatures between -29°C (20°F) and 10°C (50°F).*
2. *When using 240 volt product at 208, 220 or 277 volts, use the circuit adjustment factors shown in the Voltage Adjustment Table.*
3. *When using 2 or more heater cables of different wattage ratings in parallel on a single circuit breaker, use the 15A column amperage of 15 amps, divide it by the maximum footage to arrive at an amps/foot figure for each cable. You can then calculate circuit breaker sizes for these combination loads. These amps/foot factors include the 125% sizing factor.*
4. *National electrical codes require ground-fault equipment protection for each branch circuit supplying electric heating equipment. Exceptions to this requirement can be found in the NFPA 70, National Electrical Code.*
5. *Heater cables with D1- optional construction require the use of a ground fault interrupter/ground leakage device with a trip setting no greater than 30mA.*

© March 2019

Type XLT Self–Regulating Heater Cable

For use in Ordinary (Unclassified) and Hazardous (Classified) Locations

UL:	*UL:*	*CSA:*	*CSA:*	*FM:*	*FM:*	*FM:*
-CB or -J options: Class I, Division 2, Groups A, B, C, D; Class II, Division 2, Groups F, G; Class I, Zone 1, AEx e II	*D1- option: Class I, Division 1, Groups B, C, D; Class II, Division 1, Groups E, F, G; Class III*	*-CB or -J options: Class I, Division 2, Groups B, C, D; Class II, Division 2, Groups E, F, G; Class III, Class I, Zone 2, Group IIB+H_2*	*-J option: Class I, Division 1, Groups B, C, D; Class II, Division 1, Groups E, F, G; Class I, Zone 1, Group IIB, Zone 1, Ex e II T3*	*-CB or -J options: Class I, Division 2, Groups A, B, C, D; Class II, Division 2, Groups F, G; Class III*	*-J option: Class I, Zone 1 AEx e II; Group IIC*	*D1- option: Class I, Division 1, Groups B, C, D; Class I, Zone 1; Group IIB*

Power Output Rating

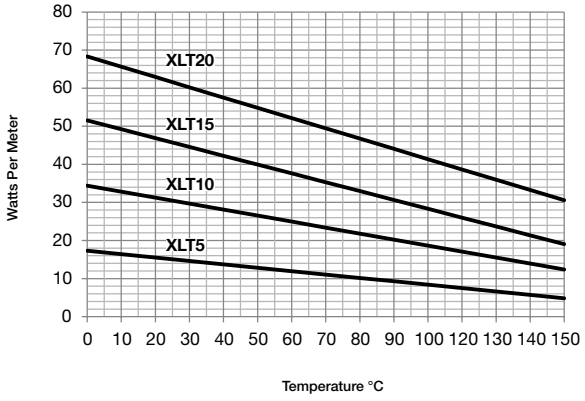

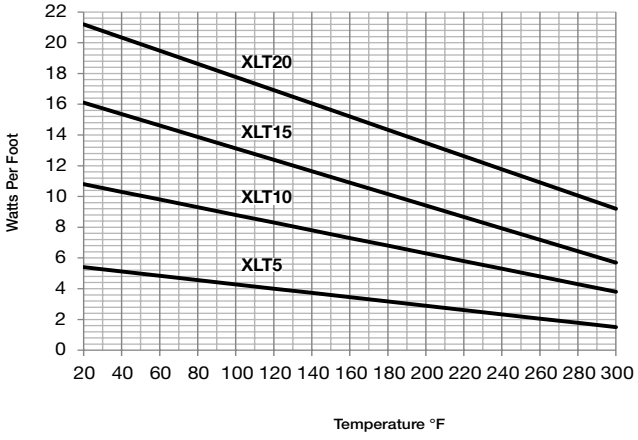

Visit our website at www.nelsonheaters.com or contact us at United States: (800) 621-1506 | Europe: +33.3.22.54.13.90.
© March 2019

EMERSON

Type XLT Self–Regulating Heater Cable

For use in Ordinary (Unclassified) and Hazardous (Classified) Locations

UL:	UL:	CSA:	CSA:	FM:	FM:	FM:
-CB or -J options: Class I, Division 2, Groups A, B, C, D; Class II, Division 2, Groups F, G; Class I, Zone 1, AEx e II	*D1- option: Class I, Division 1, Groups B, C, D; Class II, Division 1, Groups E, F, G; Class III*	*-CB or -J options: Class I, Division 2, Groups B, C, D; Class II, Division 2, Groups E, F, G; Class III, Class I, Zone 2, Group IIB+H_2*	*-J option: Class I, Division 1, Groups B, C, D; Class II, Division 1, Groups E, F, G; Class I, Zone 1, Group IIB, Zone 1, Ex e II T3*	*-CB or -J options: Class I, Division 2, Groups A, B, C, D; Class II, Division 2, Groups F, G; Class III*	*-J option: Class I, Zone 1 AEx e II; Group IIC*	*D1- option: Class I, Division 1, Groups B, C, D; Class I, Zone 1; Group IIB*

Selection Table

Service Voltage	Maximum Segment Length Meters (Ft)	Description	Catalog Number
120	110 (365)	Tinned Copper Braid	**XLT5-CB**
		Tinned Copper Braid and Fluoropolymer	**XLT5-J**
		Class I, Division 1, Groups B, C and D	**D1-XLT5**
240	220 (725)	Tinned Copper Braid	**XLT25-CB**
		Tinned Copper Braid and Fluoropolymer	**XLT25-J**
		Class I, Division 1, Groups B, C and D	**D1-XLT25**
120	80 (255)	Tinned Copper Braid	**XLT10-CB**
		Tinned Copper Braid and Fluoropolymer	**XLT10-J**
		Class I, Division 1, Groups B, C and D	**D1-XLT10**
240	155 (515)	Tinned Copper Braid	**XLT210-CB**
		Tinned Copper Braid and Fluoropolymer	**XLT210-J**
		Class I, Division 1, Groups B, C and D	**D1-XLT210**
120	60 (195)	Tinned Copper Braid	**XLT15-CB**
		Tinned Copper Braid and Fluoropolymer	**XLT15-J**
		Class I, Division 1, Groups B, C and D	**D1-XLT15**
240	120 (390)	Tinned Copper Braid	**XLT215-CB**
		Tinned Copper Braid and Fluoropolymer	**XLT215-J**
		Class I, Division 1, Groups B, C and D	**D1-XLT215**
120	45 (150)	Tinned Copper Braid	**XLT20-CB**
		Tinned Copper Braid and Fluoropolymer	**XLT20-J**
		Class I, Division 1, Groups B, C and D	**D1-XLT20**
240	90 (300)	Tinned Copper Braid	**XLT220-CB**
		Tinned Copper Braid and Fluoropolymer	**XLT220-J**
		Class I, Division 1, Groups B, C and D	**D1-XLT220**

Voltage Adjustment ①

Absolute Max Length Meters (Feet)	Adjustment Multiplier 208 Vac Power	208 Vac Length	220 Vac Power	220 Vac Length	277 Vac Power	277 Vac Length	Product
220 (725)	0.76	0.93	0.85	0.96	1.29	1.07	XLT25
155 (515)	0.80	0.93	0.88	0.96	1.23	1.07	XLT210
120 (390)	0.83	0.93	0.89	0.96	1.19	1.02	XLT215
90 (300)	0.88	I.00	0.93	1.00	1.15	1.00	XLT220

① *Use of self-regulating heater products at other than rated voltages require minor adjustments in power and maximum circuit lengths..*

© March 2019

Type LLT Long Line Self–Regulating Heater

For use in Ordinary (Unclassified) and Hazardous (Classified) Locations

UL:
Ordinary (Unclassified) Locations

CSA:
-J option: Class I, Division 2, Groups A, B, C, D
Class I, Zone 1
Group IIC

Description

- Nelson Type LLT heater cable is parallel, self regulating with a radiation cross-linked conductive heating core extruded continuously over two parallel 10-gauge bus wires.
- A primary dielectric jacket is thermally bonded to the heating core to prevent moisture penetration and a secondary dielectric jacket is extruded over the first.
- Heater construction includes a tinned copper braid and an over jacket.

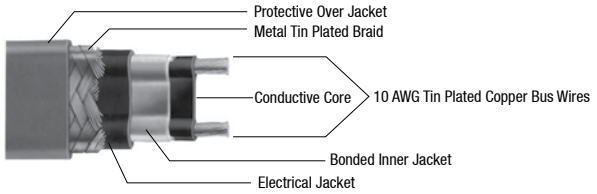

Operating Principle

- The heating core varies power output inversely with temperature at every point along the heater length, reducing any heat build up at portions of the piping system.
- This feature also permits the heater to be overlapped without creating hot spots.
- Reduced power output at higher pipe temperatures reduces energy consumption.
- Parallel construction permits the heater to be cut to length at any point without changing rated power output.

Application

- Nelson Type LLT self-regulating heater cable is ideal for use in maintaining fluid flow under low ambient conditions.
- Freeze protection and low watt density process temperature systems that require extended continuous circuit lengths.

Standard Materials

- Tinned Copper Braid and Fluoropolymer Over Jacket, Suffix **-J**

Accessories

- Nelson AX-LLT, EX-LLT and HEC-LLT Series Connection Kits for Power, Splice and End Termination
- Nelson TA, TH, TE and HC Series Thermostatic Controls
- Junction Boxes, Tapes and Warning Signs
- Custom Control, Monitoring and Power Panels

Certifications and Compliances

- UL Listed: E53501
- CSA Standard: C22.2 No. 130-16
- CSA Certified: LR42103, LR42104
- Other Standards: IEEE 515-2011, IEEE 515.1-2012

© March 2019

Type LLT Long Line Self–Regulating Heater

For use in Ordinary (Unclassified) and Hazardous (Classified) Locations

UL:
Ordinary (Unclassified) Locations

CSA:
-J option: Class I, Division 2, Groups A, B, C, D
Class I, Zone 1
Group IIC

Performance Rating

Service Voltage	Maximum Maintenance Temperature °C (°F)	Maximum Intermittent Exposure °C (°F)	T–Rating ①	Watts/m (Watts/ft)
240	65 (150)	85 (185)	T5	23 (7)
240	65 (150)	85 (185)	T5	33 (10)

Circuit Breaker Selection

Watts/m (Watts/ft)	Start–Up Temp. °C (°F)	Maximum Length in Meters (Feet) Vs. Circuit Breaker Size 240 Vac 15A	20A	30A	40A	50A	60A	70A
23 (7)	10 (50)	105 (340)	140 (455)	205 (680)	275 (905)	320 (1045)	320 (1045)	320 (1045)
	-18 (0)	75 (245)	100 (330)	150 (495)	200 (660)	250 (825)	300 (990)	320 (1045)
	-29 (-20)	70 (225)	90 (295)	135 (445)	180 (595)	225 (740)	270 (890)	320 (1045)
	-40 (-40)	65 (205)	80 (270)	125 (405)	165 (540)	205 (675)	245 (810)	290 (945)
33 (10)	10 (50)	75 (250)	100 (335)	150 (500)	205 (670)	250 (815)	250 (815)	250 (815)
	-18 (0)	55 (185)	75 (245)	110 (365)	150 (490)	185 (610)	225 (735)	250 (815)
	-29 (-20)	50 (165)	65 (220)	100 (330)	135 (440)	170 (550)	200 (660)	235 (770)
	-40 (-40)	45 (150)	60 (200)	90 (300)	120 (400)	150 (500)	185 (605)	215 (700)

① Electrical equipment T rating codes define the maximum surface temperature that equipment will reach. It is used in hazardous (classified) area applications.

Notes

1. *Circuit breakers are sized per national electrical codes and are based on start-up temperatures between -40°F (-40°C) and 50°F (10°C).*
2. *When using 240 volt product at 208, 220 or 277 volts, use the circuit adjustment factors shown in the Voltage Adjustment Table.*
3. *When using 2 or more heater cables of different wattage ratings in parallel on a single circuit breaker, use the 15A column amperage of 15 amps, divide it by the maximum footage to arrive at an amps/foot figure for each cable. You can then calculate circuit breaker sizes for these combination loads. These amps/foot factors include the 125% sizing factor.*
4. *National electrical codes require ground-fault equipment protection for each branch circuit supplying electric heating equipment. Exceptions to this requirement can be found in the NFPA 70, National Electrical Code.*

© March 2019

Type LLT Long Line Self–Regulating Heater

For use in Ordinary (Unclassified) and Hazardous (Classified) Locations

UL:
Ordinary (Unclassified) Locations

CSA:
-J option: Class I, Division 2, Groups A, B, C, D
Class I, Zone 1
Group IIC

Power Output Rating

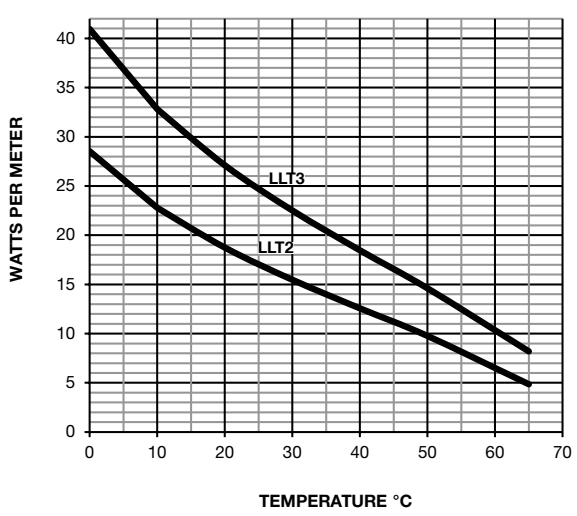

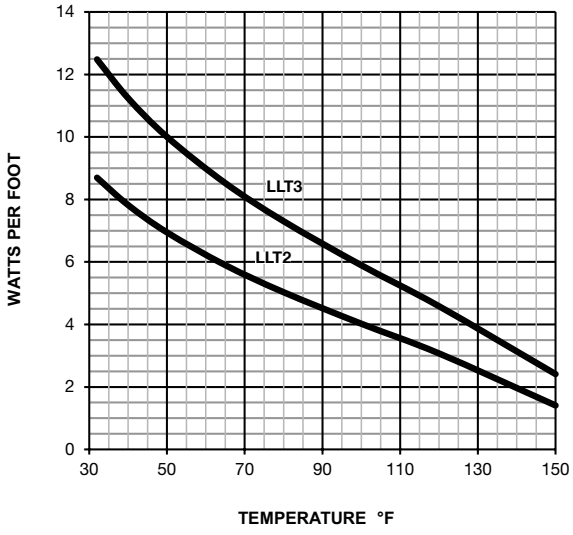

Selection Table

Service Voltage	Maximum Segment Length Meters (Ft)	Description	Catalog Number
240	320 (1045)	Tinned Copper Braid and Fluoropolymer	**LLT2-J**
240	250 (815)		**LLT3-J**

Voltage Adjustment ①

Absolute Max Length Meters (Feet)	Adjustment Multiplier 208 Vac Power	220 Vac Power	277 Vac Power	Product
320 (1045)	0.87	0.92	1.13	LLT2
250 (815)	0.89	0.93	1.08	LLT3

① Use of self-regulating heater products at other than rated voltages require minor adjustments in power and maximum circuit lengths.

© March 2019

230V Type LT Self–Regulating Heater Cable

ATEX:
II 2 G Ex e IIC T5 to T6 Gb
II 2 D Ex tb IIIC T80°C to T95°C
KEMA 07ATEX0124
-40°C ≤ Tamb ≤ +55°C

IECEx:
II 2 G Ex e IIC T5 to T6 Gb
II 2 D Ex tb IIIC T80°C to T95°C

Description

- An irradiation cross-linked conductive polymer core material is extruded over the multi-stranded, tin plated, 1.3 mm^2 copper bus wires.
- Two jackets provide extra dielectric strength, moisture resistance, and protection from impact and abrasion damage.
- The inner thermoplastic jacket is extruded over and bonded to the core material.
- A thermoplastic elastomer over jacket is then extruded over the inner jacket.
- A stranded copper metal braid and fluoropolymer over jacket is supplied on all heaters.
- Maintain Temperature: 65°C
- Maximum Continuous Exposure Temperature: 65°C (continuous power on)
- Maximum Intermittent Exposure Temperature: 85°C (1000 hours cumulative exposure)
- Temperature Classification (T Code): T6 85°C / T 100°C per European Standard EN 50014
- Bus Wire Size: 1.3 mm^2 Copper Conductors
- Tinned Copper Braid Resistance: Maximum 0.015 Ω/m
- Product Dimensions (Nominal): 6.2 mm x 12.2 mm
- Product Weight: 106.0 g/m
- Minimum Installation Temperature: -40°C
- Minimum Bend Radius: 12.0mm at -40°C

Operating Principle

- The parallel bus wires apply voltage along the entire length of the heater cable.
- The conductive core provides a continuous parallel heating element permitting the cable to be cut to any length in the field with no dead or cold zones developing.
- The heater cable derives its self-regulating characteristic from the inherent properties of the conductive core material.
- As the core material temperature increases, the number of conductive paths in the core material decreases, automatically decreasing the heat output.
- As the temperature decreases, the number of conductive paths increases, causing the heat output to increase.
- This occurs at every point along the length of the cable, adjusting the power output to the varying conditions along the pipe.
- The self-regulating effect allows the cable to be overlapped without creating hot spots or burnout.
- As the cable self-regulates its heat output, it provides for the efficient use of electric power, producing heat only when and where it is needed, and also limiting the maximum sheath temperature.

Application

- Nelson Type LT self-regulating heater cable is ideal for maintaining fluid flow under low ambient conditions.
- The product is used for freeze protection and low watt density process temperature maintenance of pipes and vessels.
- Typical applications include process water, lube oil, fire protection, dust suppression and structure deicing.
- The standard cable is supplied with a tinned copper metal braid and a fluoropolymer or modified polyolefin over jacket suitable for exposure to excessive moisture, organic and inorganic chemicals, solvents, etc. in Zone 1 and Zone 2 hazardous areas and in ordinary (unclassified) areas.

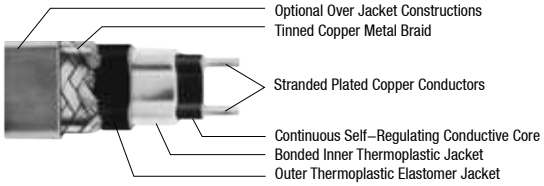

Accessories

- Nelson EX Series Connection Kits for Power, Splice, Tee Splice, Powered Splices and End Terminations
- Nelson TA and TH Series Thermostats
- Junction Boxes, Tapes and Warning Signs
- Custom Control, Monitoring and Power Panels

Certifications and Compliances

- ATEX/IECEx Protection: Ⓔx II 2 G, Ⓔx e IIC T5 to T6 Gb, Ⓔx II 2 D, Ⓔx tb IIIC T80ºC to T95ºC
  - Ambient Temperature: -40 ºC ≤ Tamb ≤ 55 ºC
- ATEX Certificate: KEMA 07 ATEX 0124
- IECEx Certificate: KEM 07.0041
- Other Standards: IEC/IEEE 60079-30

© March 2019

230V Type LT Self–Regulating Heater Cable

ATEX:
II 2 G Ex e IIC T5 to T6 Gb
II 2 D Ex tb IIIC T80°C to T95°C
KEMA 07ATEX0124
-40°C ≤ Tamb ≤ +55°C

IECEx:
II 2 G Ex e IIC T5 to T6 Gb
II 2 D Ex tb IIIC T80°C to T95°C

Performance Rating

Service Voltage	Maximum Maintenance Temperature °C	Maximum Continuous Exposure Temperature °C	Maximum Intermittent Exposure °C	T–Rating ①	Watts/m
230	65	65	85	T6	9
230	65	65	85	T6	15
230	65	65	85	T5	25
230	65	65	85	T5	32

Circuit Breaker Selection

Watts/m	Start–Up Temp. °C	Total Heater Length in Meters Vs. Circuit Breaker Size 230 Vac 16A	20A	25A	32A	40A
9	10	240	300	375	480	605
	-5	190	240	300	385	480
	-20	160	200	250	320	400
	-30	145	180	225	285	360
15	10	170	215	265	340	425
	-5	135	170	210	270	340
	-20	110	140	175	225	280
	-30	100	125	155	200	250
25	10	90	115	140	180	225
	-5	75	90	115	150	185
	-20	65	80	100	125	155
	-30	55	70	90	115	140
32	10	55	70	90	115	145
	-5	50	60	75	95	120
	-20	40	50	65	85	105
	-30	40	45	60	75	95

① *Electrical equipment T-rating codes define the maximum surface temperature that equipment will reach. It is intended for applications in potentially explosive atmospheres – Directive 94/9/EC.*

Notes

1. *The circuit length values shown above are for estimation only.*
2. *Total heater length is the total length of heater cable that can be installed on a breaker without tripping either under start-up or operating conditions. Values may indicate that multiple heater segments must be installed on the breaker with none of the segments exceeding the maximum segment lengths as shown in the performance and rating table.*
3. *For detailed information on maximum circuit lengths or additional voltages, refer to Nelson Heat Tracing Systems Selection software or contact your local Nelson representative for assistance.*

© March 2019

230V Type LT Self–Regulating Heater Cable

ATEX:
II 2 G Ex e IIC T5 to T6 Gb
II 2 D Ex tb IIIC T80°C to T95°C
KEMA 07ATEX0124
-40°C ≤ Tamb ≤ +55°C

IECEx:
II 2 G Ex e IIC T5 to T6 Gb
II 2 D Ex tb IIIC T80°C to T95°C

Power Output Rating

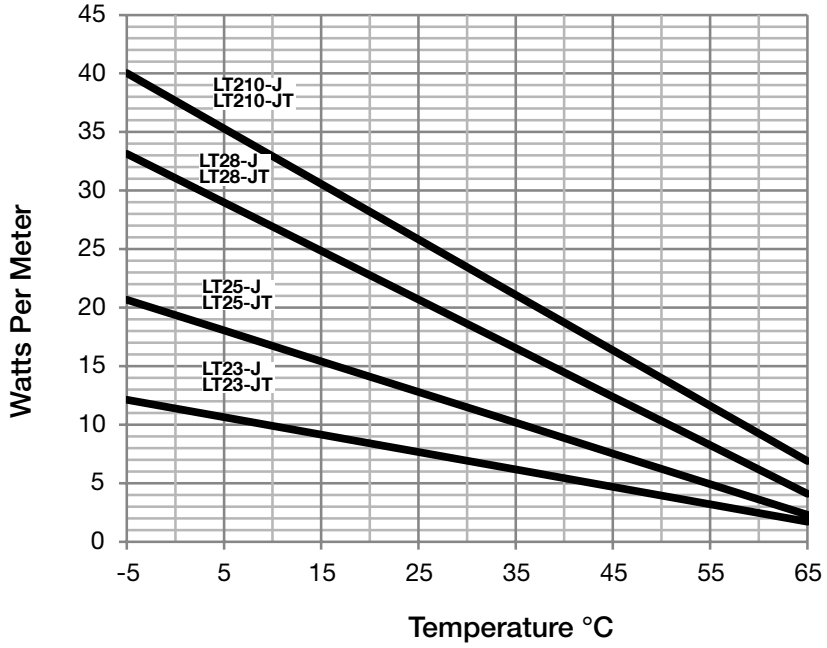

Selection Table

Service Voltage	Maximum Segment Length Meters	Description	Catalog Number
230	225	Tinned Copper Braid and Fluoropolymer	**LT23-J**
		Tinned Copper Braid and Modified Polyolefin	**LT23-JT**
230	170	Tinned Copper Braid and Fluoropolymer	**LT25-J**
		Tinned Copper Braid and Modified Polyolefin	**LT25-JT**
230	135	Tinned Copper Braid and Fluoropolymer	**LT28-J**
		Tinned Copper Braid and Modified Polyolefin	**LT28-JT**
230	120	Tinned Copper Braid and Fluoropolymer	**LT210-J**
		Tinned Copper Braid and Modified Polyolefin	**LT210-JT**

© March 2019

230V Type HLT Self–Regulating Heater Cable

ATEX:
II 2 G Ex e IIC T3 Gb
II 2 D Ex tb IIIC T195°C
-40°C ≤ Tamb ≤ +55°C

IECEx:
II 2 G Ex e IIC T3 Gb
II 2 D Ex tb IIIC T195°C
-40°C ≤ Tamb ≤ +55°C

Description

- Nelson Self-Regulating Heater Cable Type HLT is a parallel circuit electric heater strip.
- A conductive fluoropolymer core material is extruded over the multi-stranded, nickel-plated, 1.3 mm2 copper bus wires.
- A fluoropolymer jacket provides excellent dielectric strength, moisture resistance, protection from impact and abrasion damage, and a wide range of chemical resistance.
- A stranded tinned copper metal braid and fluoropolymer over jacket is supplied on all heaters.
- Maintain Temperature: 120°C
- Maximum Continuous Exposure Temperature: 120°C (continuous power on)
- Maximum Intermittent Exposure Temperature: 215°C (1000 hours cumulative exposure)
- Temperature Classification (T Code): T3 200°C as per IEC 60079 standards
- Bus Wire Size: 1.3 mm^2 Copper Conductors
- Tinned Copper Braid Resistance: Maximum 0.015 Ω/m
- Product Dimensions (Nominal): 5.1 mm x 10.5 mm
- Product Weight: 112.0 g/m
- Minimum Installation Temperature: -40°C
- Minimum Bend Radius: 25 mm at -40°C

Operating Principle

- The parallel bus wires apply voltage along the entire length of the heater cable.
- The conductive core provides a continuous parallel heating element permitting the cable to be cut to any length in the field with no dead or cold zones developing.
- The heater cable derives its self-regulating characteristic from the inherent properties of the conductive core material.
- As the core material temperature increases, the number of conductive paths in the core material decreases, automatically decreasing the heat output.
- As the temperature decreases, the number of conductive paths increases, causing the heat output to increase.
- This occurs at every point along the length of the cable, adjusting the power output to the varying conditions along the pipe.
- As the cable self-regulates its heat output, it limits the maximum sheath temperature, while also providing useful power for process temperature maintenance.

Application

- Nelson Type HLT self-regulating heater cable is ideal for maintaining fluid flow over a wide range of operating temperatures.
- The product is used for freeze protection of periodically steam (13.8 BAR) cleaned pipes and temperature maintenance for 120°C or lower processes.
- Typical applications include hydrocarbon and chemical product piping.

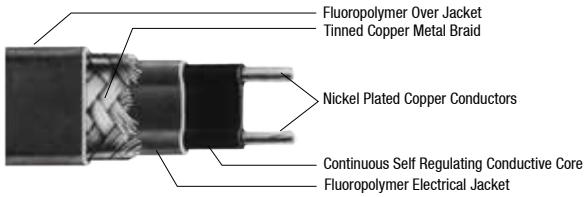

Accessories

- Nelson EX Series Connection Kits for Power, Splice, Tee Splice, Powered Splices and End Terminations
- Nelson TA and TH Series Thermostats
- Junction Boxes, Tapes and Warning Signs
- Custom Control, Monitoring and Power Panels

Certifications and Compliances

- ATEX/IECEx Protection: Ⓔx II 2 G, Ⓔx e IIC T3 Gb, Ⓔx II 2 D, Ⓔx tb IIIC T195ºC
  - Ambient Temperature: -40ºC ≤ Tamb ≤ 55ºC
- ATEX Certificate: KEMA 07 ATEX 0124
- IECEx Certificate: KEM 07.0041
- Other Standards: IEC/IEEE 60079-30

Visit our website at www.nelsonheaters.com or contact us at United States: (800) 621-1506 | Europe: +33.3.22.54.13.90.
© March 2019
EMERSON

230V Type HLT Self–Regulating Heater Cable

ATEX:
II 2 G Ex e IIC T3 Gb
II 2 D Ex tb IIIC T195°C
-40°C ≤ Tamb ≤ +55°C

IECEx:
II 2 G Ex e IIC T3 Gb
II 2 D Ex tb IIIC T195°C
-40°C ≤ Tamb ≤ +55°C

Performance Rating

Service Voltage	Maximum Maintenance Temperature °C	Maximum Continuous Exposure Temperature °C	Maximum Intermittent Exposure °C	T–Rating ①	Watts/m
230	120	120	215	T3	15
230	120	120	215	T3	32
230	120	120	215	T3	46
230	120	120	215	T3	63

Circuit Breaker Selection

Watts/m	Start–Up Temp. °C	Total Heater Length Meters Vs. Circuit Breaker Size 230 Vac 16A	20A	25A	32A	40A
15	10	175	220	270	350	435
	-5	160	200	250	320	400
	-20	150	185	235	300	375
	-30	145	180	225	285	355
32	10	100	125	155	200	250
	-5	95	115	145	185	230
	-20	85	110	135	175	215
	-30	85	105	130	165	210
46	10	70	85	110	140	175
	-5	65	80	100	130	165
	-20	60	75	95	125	155
	-30	60	70	90	120	145
63	10	55	65	85	105	135
	-5	50	65	80	100	125
	-20	50	60	75	95	120
	-30	45	60	75	95	115

① *Electrical equipment T-rating codes define the maximum surface temperature that equipment will reach. It is intended for applications in potentially explosive atmospheres – Directive 94/9/EC.*

Notes

1. *The circuit length values shown above are for estimation only.*
2. *Total heater length is the total length of heater cable that can be installed on a breaker without tripping either under start-up or operating conditions. Values may indicate that multiple heater segments must be installed on the breaker with none of the segments exceeding the maximum segment lengths as shown in the performance and rating table.*
3. *For detailed information on maximum circuit lengths or additional voltages, refer to Nelson Heat Tracing Systems Selection software or contact your local Nelson representative for assistance.*

© March 2019

230V Type HLT Self–Regulating Heater Cable

ATEX:
II 2 G Ex e IIC T3 Gb
II 2 D Ex tb IIIC T195°C
-40°C ≤ Tamb ≤ +55°C

IECEx:
II 2 G Ex e IIC T3 Gb
II 2 D Ex tb IIIC T195°C
-40°C ≤ Tamb ≤ +55°C

Power Output Rating

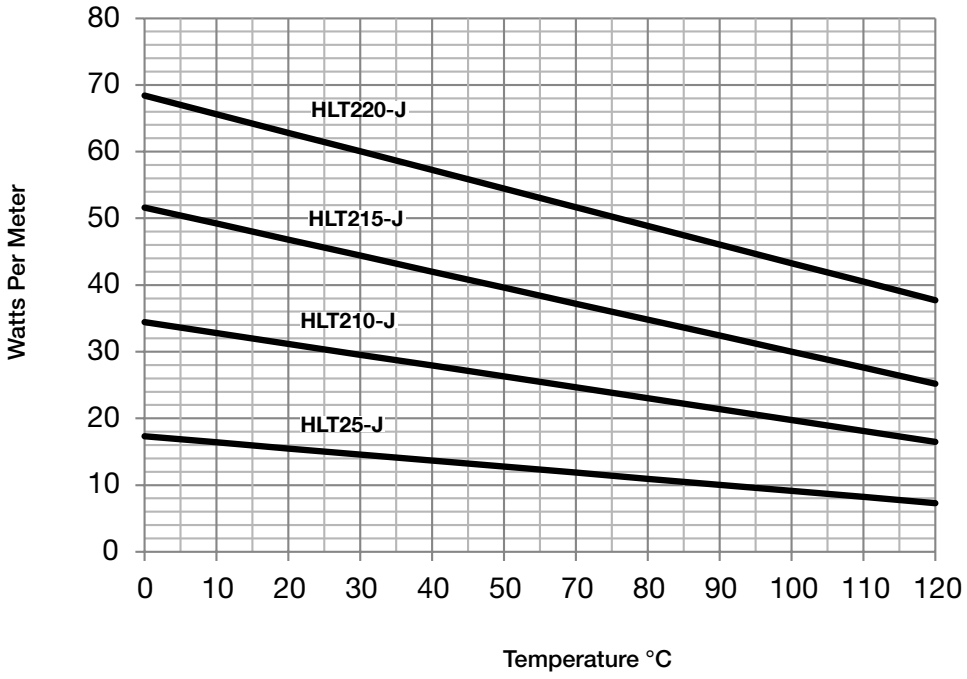

Selection Table

Service Voltage	Maximum Segment Length Meters	Description	Catalog Number
230	170	Tinned Copper Braid and Fluoropolymer	**HLT25-J**
230	120	Tinned Copper Braid and Fluoropolymer	**HLT210-J**
230	80	Tinned Copper Braid and Fluoropolymer	**HLT215-J**
230	65	Tinned Copper Braid and Fluoropolymer	**HLT220-J**

© March 2019

230V Type XLT Self–Regulating Heater Cable

ATEX:
II 2 G Ex e IIC T3 Gb
II 2 D Ex tb IIIC T195°C
-40°C ≤ Tamb ≤ +55°C

IECEx:
II 2 G Ex e IIC T3 Gb
II 2 D Ex tb IIIC T195°C
-40°C ≤ Tamb ≤ +55°C

Description

- Nelson Self-Regulating Heater Cable Type XLT is a parallel circuit electric heater strip.
- A conductive fluoropolymer core material is extruded over the multi-stranded, nickel-plated, 2.1mm^2 copper bus wires.
- A fluoropolymer jacket provides excellent dielectric strength, moisture resistance, protection from impact and abrasion damage, and a wide range of chemical resistance.
- A stranded tinned copper metal braid and fluoropolymer over jacket is supplied on all heaters.
- Maintain Temperature: 150°C
- Maximum Continuous Exposure Temperature: 150°C (continuous power on)
- Maximum Intermittent Exposure Temperature: 232°C (1000 hours cumulative exposure)
- Temperature Classification (T Code): T3 200°C as per IEC 60079 standards
- Bus Wire Size: 2.1mm^2 Copper Conductors
- Tinned Copper Braid Resistance: Maximum 0.015 Ω/m
- Product Dimensions (Nominal): 5.6 mm x 11.6 mm
- Minimum Installation Temperature: -40°C
- Minimum Bend Radius: 25mm at -40°C

Operating Principle

- The parallel bus wires apply voltage along the entire length of the heater cable.
- The conductive core provides a continuous parallel heating element permitting the cable to be cut to any length in the field with no dead or cold zones developing.
- The heater cable derives its self-regulating characteristic from the inherent properties of the conductive core material.
- As the core material temperature increases, the number of conductive paths in the core material decreases, automatically decreasing the heat output.
- As the temperature decreases, the number of conductive paths increases, causing the heat output to increase.
- This occurs at every point along the length of the cable, adjusting the power output to the varying conditions along the pipe.
- As the cable self-regulates its heat output, it limits the maximum sheath temperature, while also providing useful power for process temperature maintenance.

Application

- Nelson Type XLT self-regulating heater cable is ideal for maintaining fluid flow over a wide range of operating temperatures.
- The product is used for freeze protection of periodically steam (29 BAR) cleaned pipes and temperature maintenance for 232°C or lower processes.
- Typical applications include hydrocarbon and chemical product piping.

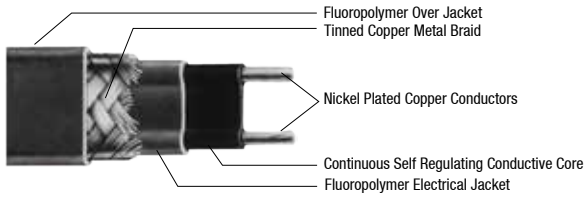

Accessories

- Nelson EX Series Connection Kits for Power, Splice, Tee Splice, Powered Splices and End Terminations
- Nelson TA and TH Series Thermostats
- Junction Boxes, Tapes and Warning Signs
- Custom Control, Monitoring and Power Panels

Certifications and Compliances

- ATEX/IECEx Protection: Ⓔx II 2 G, Ⓔx e IIC T3 Gb, Ⓔx II 2 D, Ⓔx tb IIIC T195ºC
- Ambient Temperature: -40ºC ≤ Tamb ≤ 55ºC
- ATEX Certificate: KEMA 07 ATEX 0124
- IECEx Certificate: KEM 07.0041
- Other Standards: IEC/IEEE 60079-30

© March 2019

230V Type XLT Self–Regulating Heater Cable

ATEX:
II 2 G Ex e IIC T3 Gb
II 2 D Ex tb IIIC T195°C
-40°C ≤ Tamb ≤ +55°C

IECEx:
II 2 G Ex e IIC T3 Gb
II 2 D Ex tb IIIC T195°C
-40°C ≤ Tamb ≤ +55°C

Performance Rating

Service Voltage	Maximum Maintenance Temperature °C	Maximum Continuous Exposure Temperature °C	Maximum Intermittent Exposure °C	T–Rating ①	Watts/m
230	150	150	232	T3	15
230	150	150	232	T3	32
230	150	150	232	T3	46
230	150	150	232	T3	63

Circuit Breaker Selection

Watts/m	Start–Up Temp. °C	Total Heater Length in Meters Vs. Circuit Breaker Size 230 Vac 16A	20A	25A	32A	40A
15	10	175	220	270	350	435
	-5	160	200	250	320	400
	-20	150	185	235	300	375
	-30	145	180	225	285	355
32	10	100	125	155	200	250
	-5	95	115	145	185	230
	-20	85	110	135	175	215
	-30	85	105	130	165	210
46	10	70	85	110	140	175
	-5	65	80	100	130	165
	-20	60	75	95	125	155
	-30	60	70	90	120	145
63	10	55	65	85	105	135
	-5	50	65	80	100	125
	-20	50	60	75	95	120
	-30	45	60	75	95	115

① *Electrical equipment T-rating codes define the maximum surface temperature that equipment will reach. It is intended for applications in potentially explosive atmospheres – Directive 94/9/EC.*

Notes

1. *The circuit length values shown above are for estimation only.*
2. *Total Heater Length is the total length of heater cable that can be installed on a breaker without tripping either under start-up or operating conditions. Values may indicate that multiple heater segments must be installed on the breaker with none of the segments exceeding the Maximum Segment Lengths as shown in the Performance and Rating table.*
3. *For detailed information on maximum circuit lengths or additional voltages, refer to Nelson Heat Tracing Systems Selection software or contact your local Nelson representative for assistance.*

© March 2019

230V Type XLT Self–Regulating Heater Cable

ATEX:
II 2 G Ex e IIC T3 Gb
II 2 D Ex tb IIIC T195°C
-40°C ≤ Tamb ≤ +55°C

IECEx:
II 2 G Ex e IIC T3 Gb
II 2 D Ex tb IIIC T195°C
-40°C ≤ Tamb ≤ +55°C

Power Output Rating

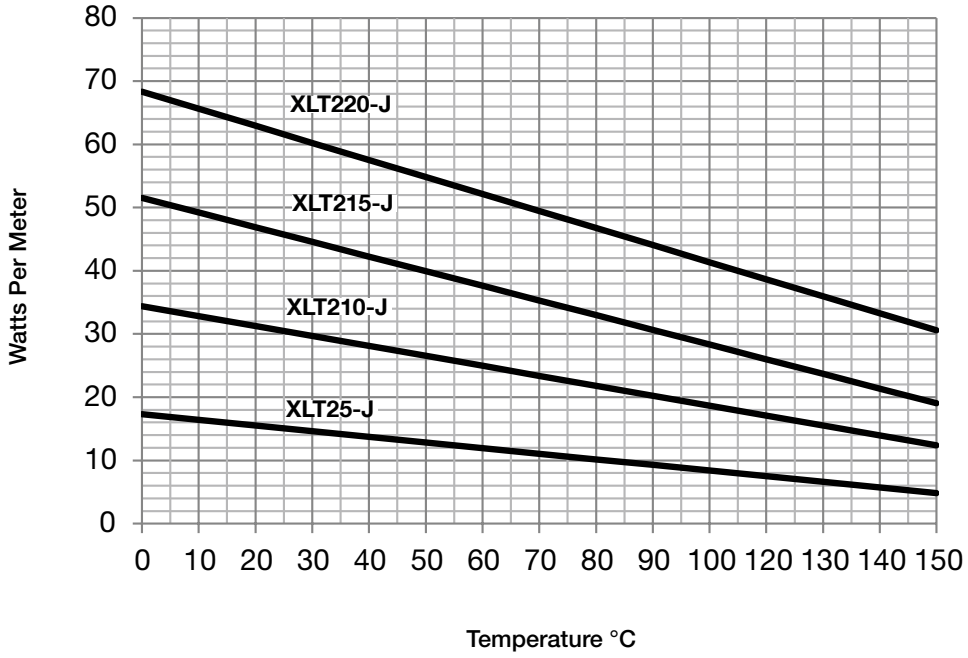

Selection Table

Service Voltage	Maximum Segment Length Meters	Description	Catalog Number
230	220	Tinned Copper Braid and Fluoropolymer	**XLT25-J**
230	155	Tinned Copper Braid and Fluoropolymer	**XLT210-J**
230	120	Tinned Copper Braid and Fluoropolymer	**XLT215-J**
230	90	Tinned Copper Braid and Fluoropolymer	**XLT220-J**

© March 2019

230V Type LLT Long Line Self–Regulating Heater

ATEX:
II 2 G Ex e IIC T5
II 2 D Ex tb IIIC T95°C
-40°C ≤ Tamb ≤ +55°C

IECEx:
II 2 G Ex e IIC T5 Gb
II 2 D Ex tb IIIC T95°C
-40° C ≤ Tamb ≤ +55° C

Description

- An irradiation cross-linked conductive polymer core material is extruded over the multi-stranded, tin plated, 5.3 mm² copper bus wires.
- Two jackets provide extra dielectric strength, moisture resistance, and protection from impact and abrasion damage.
- The inner thermoplastic jacket is extruded over and bonded to the core material.
- A thermoplastic elastomer over jacket is then extruded over the inner jacket.
- A stranded copper metal braid and fluoropolymer over jacket is supplied on all heaters.
- Maintain Temperature: 65°C
- Maximum Continuous Exposure Temperature: 65°C (continuous power on)
- Maximum Intermittent Exposure Temperature: 85°C (1000 hours cumulative exposure)
- Temperature Classification (T Code): T5 100°C per European Standard EN 60079-30
- Bus Wire Size: 5.3 mm² Copper Conductors
- Tinned Copper Braid Resistance: Maximum 0.012 Ω/m
- Product Dimensions (Nominal): 7.5 mm x 15.0 mm
- Product Weight: 246 g/m
- Minimum Installation Temperature: -40°C
- Minimum Bend Radius: 25.0mm at -40°C

Operating Principle

- The heating core varies power output inversely with temperature at every point along the heater length, reducing any heat build up at portions of the piping system.
- This feature also permits the heater to be overlapped without creating hot spots.
- Reduced power output at higher pipe temperatures reduces energy consumption.
- Parallel construction permits the heater to be cut to length at any point without changing rated power output.

Application

- Nelson LLT heater is an LT heater with extended circuit lengths for longer continuous runs.
- It can be applied to either metal or plastic pipes.
- Typical uses include water freeze protection and low watt density process temperature piping systems such as caustic lines.

Standard Materials

- Tinned Copper Braid and Fluoropolymer Over Jacket, Suffix **-J**

Accessories

- Nelson EX-LLT and HEC-LLT Series Connection Kits for Power, Splice and End Termination
- Nelson TA, TH, TE and HC Series Thermostatic Controls
- Junction Boxes, Tapes and Warning Signs
- Custom Control, Monitoring and Power Panels

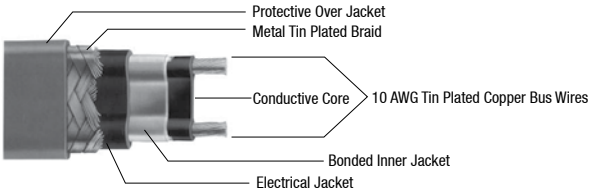

Certifications and Compliances

- ATEX/IECEx Protection: Ⓔx II 2 G, Ⓔx e IIC T5 Gb, Ⓔx II 2 D, Ⓔx tb IIIC T95°C
  – Ambient Temperature: -40°C ≤ Tamb ≤ 55°C
- ATEX Certified: 15ATEX0064
- IECEx Certified: DEK 15.0032
- Other Standards: IEC/IEEE 60079-30

© March 2019

230V Type LLT Long Line Self–Regulating Heater

ATEX:
II 2 G Ex e IIC T5
II 2 D Ex tb IIIC T95°C
-40°C ≤ Tamb ≤ +55°C

IECEx:
II 2 G Ex e IIC T5 Gb
II 2 D Ex tb IIIC T95°C
-40° C ≤ Tamb ≤ +55° C

Performance Rating

Service Voltage	Maximum Maintenance Temperature °C	Maximum Continuous Exposure Temperature °C	Maximum Intermittent Exposure °C	T–Rating ①	Watts/m
230	65	85	85	T5	23
230	65	85	85	T5	33

Circuit Breaker Selection

Watts/m	Start–Up Temp. °C	Maximum Length in Meters Vs. Circuit Breaker Size 230 Vac 16A	20A	25A	32A	40A
23	10	130	163	204	261	326
	-5	108	136	169	217	271
	-20	93	116	145	186	232
	-30	85	106	132	169	212
33	10	98	122	153	195	244
	-5	81	102	127	163	204
	-20	70	87	109	140	175
	-30	64	80	100	128	160

① Electrical equipment T rating codes define the maximum surface temperature that equipment will reach. It is used in hazardous (classified) area applications.
Notes
1. Circuit breakers are sized per national electrical codes and are based on start-up temperatures between -30°C and 10°C.
2. When using 2 or more heater cables of different wattage ratings in parallel on a single circuit breaker, use the 15A column amperage of 15 amps, divide it by the maximum footage to arrive at an amps/foot figure for each cable. You can then calculate circuit breaker sizes for these combination loads.

© March 2019

230V Type LLT Long Line Self–Regulating Heater

ATEX:
II 2 G Ex e IIC T5
II 2 D Ex tb IIIC T95°C
-40°C ≤ Tamb ≤ +55°C

IECEx:
II 2 G Ex e IIC T5 Gb
II 2 D Ex tb IIIC T95°C
-40° C ≤ Tamb ≤ +55° C

Power Output Rating

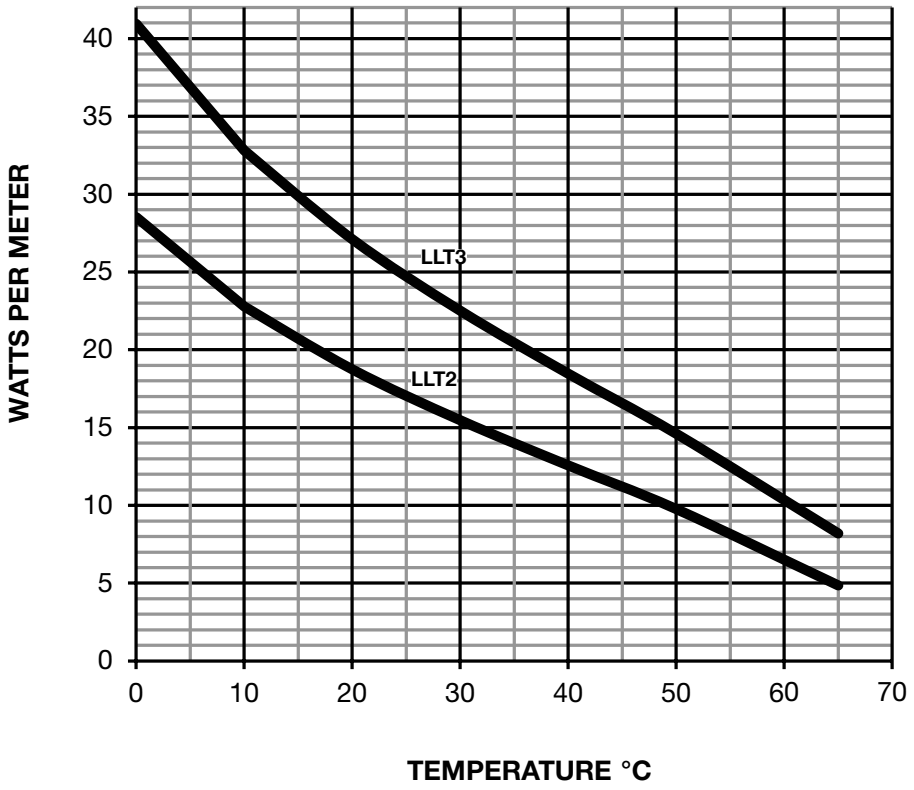

Selection Table

Service Voltage	Maximum Segment Length Meters	Description	Catalog Number
230	305	Tinned Copper Braid and Fluoropolymer	**LLT2-J**
230	240		**LLT3-J**

© March 2019

Type AX/EX Series Power Connection Kits

UL:	CSA:	FM:	ATEX:
Class I, Division 2, Groups A, B, C, D *Class II, Division 2, Groups F, G* *Class III, Division 1 and 2*	*Class I, Division 2, Groups B, C, D* *Class II, Groups E, F, G (Canada Only)* *Class III (Canada Only)* *Enclosure Type 4X, Temperature Code T6 – T3* *Class I, Zone 1; Ex e II; T6 – T3* ①	*Class I, Division 2, Groups B, C, D* *Class II, Groups E, F, G; Class III* *Enclosure Type 4X, IP66,* *Temperature Code T* ① *Class I Zone 1; AEx e IIC T* *-40°C ≤ Tamb ≤ 55°C*	*Ⓔx II 2 G Ex e IIC T6-T3* ① *Gb* *Ⓔx II 2 D Ex tb IIIC T80°-T195° C* *-40° C ≤ Tamb ≤ +55° C*

Applications

- The power connection kit is designed for terminating one heater cable to customer supplied power wiring
- The AXPC100 is designed per NEC requirements and it provides entries compatible with 3/4" NPT conduit entry
  - Standard terminal blocks are sized for maximum 8 AWG power supply wiring
- The EXPC100 is designed per IEC requirements and it provides entries compatible with M25 threaded glands and fittings
  - Standard terminal blocks are sized for maximum 6 mm² power supply wiring
- The HPC100 is a power kit that is offered without an enclosure for the customers who provide the connection enclosure separately
- Kits are used to connect and terminate Nelson self-regulating heater cable series LT-J, LT-JT, HLT-J, XLT-J, LLT-J and CLT-JT ②

Features

- The enclosure must be rated to meet the specifics of the installed environment
- Global-reach industrial-grade universal connection kits for Hazardous Locations
- Certified for NEC/CEC (AX Series) and IEC (EX Series) installations
- Incorporate rugged, non-metallic construction rated for IP66 / NEMA 4X
- Designed with corrosion resistant, anti-static enclosures and components
- Easy entry and connectivity with terminal blocks and DIN rails
- Fit all wattages of Nelson LT-J, LT-JT, HLT-J, XLT-J, LLT-J and CLT-JT series self-regulating heater cables
- Number of Entries: One
- Min Installation Temp: -40°C (-40°F)
- Temp Use Range: -50°C to +55°C (-58°F to 131°F) ambient
- Conductor Size: 1 mm² (18 AWG) to 6 mm² (8 AWG), -LLT 1.5mm² (16 AWG) to 10mm² (6 AWG)
- Voltage Range: 300 Vac Maximum
- Ingress Protection: NEMA 4X, IP66
- Max Amperage: 14A CLT Series, 18A LT Series, HLT Series, 25A XLT Series and 38A LLT Series
- Enclosure Material: Glass reinforced, carbon-loaded, polyester, UV resistant, polymer
- Weight 1 kg (2.2 lbs)

Accessories

- Pipe clamp to secure standoff to pipe (one is included in each kit):
  - PC03 – 80 mm (3 in) and smaller pipe
  - PC12 – 80 mm (3 in) to 12 inch (300 mm) pipe
  - PC20 – 300 mm (12 in) to 20 inch (500 mm) pipe
- Small pipe adapter: HC-SPA – 25 mm (1.0 in) and smaller pipe

Ordering Information

- One kit should be ordered for each type of connection needed
- A pipe clamp of the appropriate size for the pipe must be selected (-3 for PC03, -12 for PC12, -20 for PC20) for each connection kit
- A small pipe adapter kit must be ordered for each kit for installation on 25mm (1 inch) or smaller pipe

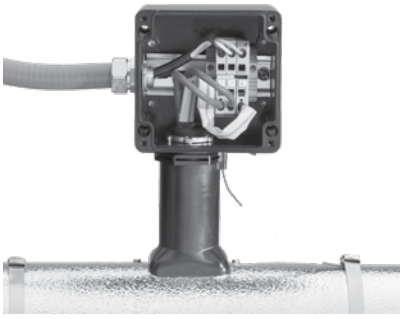

Dimensions in Millimeters (Inches)

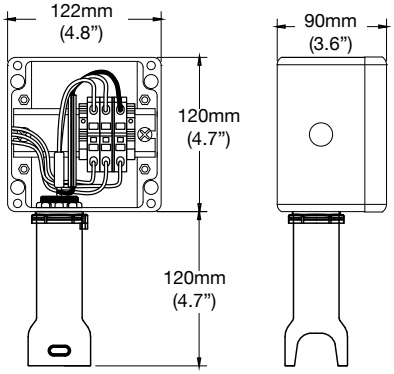

Certifications and Compliances

- UL Standard: 50 Ed. 12
- UL Listed: E53501, E49805
- CSA Standards: C22.2 No. 130-16, C22.2 No. 94-R2011, C22.2 No. 213-16
- CSA Certified: LR42103, LR42104
- FM Approved: 3047182
- FM Standard: 3600:2011, 3611:2004, 3616:2011
- ATEX Certified: 07ATEX0124
- IECEx Certified: KEM 07.0041
- Other Standards: IEEE 515-2011, IEEE 515.1-2012, ANSI/ISA 12.12.01-2015, IEC/IEEE 60079-30-1:2015, IEC 60529:2004, 60079-0:2011, 60079-7:2006, 60079-31:2013

① For temperature code, see heating cable or design information
② Ordinary (Unclassified) Location Only

© March 2019

Type AX/EX Series Power Connection Kits

UL:	CSA:	FM:	ATEX:
Class I, Division 2, Groups A, B, C, D *Class II, Division 2, Groups F, G* *Class III, Division 1 and 2*	*Class I, Division 2, Groups B, C, D* *Class II, Groups E, F, G (Canada Only)* *Class III (Canada Only)* *Enclosure Type 4X, Temperature Code T6 – T3* *Class I, Zone 1; Ex e II; T6 – T3* ①	*Class I, Division 2, Groups B, C, D* *Class II, Groups E, F, G; Class III* *Enclosure Type 4X, IP66, Temperature Code T* ① *Class I Zone 1; AEx e IIC T -40°C ≤ Tamb ≤ 55°C*	*Ⓔx II 2 G Ex e IIC T6-T3* ① *Gb* *Ⓔx II 2 D Ex tb IIIC T80°-T195° C -40° C ≤ Tamb ≤ +55° C*

Selection Table

Kit Contents	AXPC100 ②	HPC100	EXPC100 ②
Junction Box, Lid, and Terminal Block	with ¾" NPT entry	N/A	with M25 threaded entry
Standoff	1	1	1
6" Guide Tubes	2	2	2
Enclosure Adapter	1	1	1
Silicone End Termination Fitting	1	1	1
Silicone Power Termination Fitting	1	1	1
Silicone Adhesive	1	1	1
Locknut	1	1	1
Cable Grommets	1	1	1
Green Wire Tubing	1	1	1
Cable Tie	1	1	1

① *For temperature code, see heating cable or design information.*
② *Suffix **-LLT** for use with LLT Long Line Self-Regulating Heaters.*

© March 2019

Type AX/EX Series Splice Connection Kits

UL:	CSA:	FM:	ATEX:
Class I, Division 2, Groups A, B, C, D *Class II, Division 2, Groups F, G* *Class III, Division 1 and 2*	*Class I, Division 2, Groups B, C, D* *Class II, Groups E, F, G (Canada Only)* *Class III (Canada Only)* *Enclosure Type 4X, Temperature Code T6 – T3* *Class I, Zone 1; Ex e II; T6 – T3* ①	*Class I, Division 2, Groups B, C, D* *Class II, Groups E, F, G; Class III* *Enclosure Type 4X, IP66,* *Temperature Code T* ① *Class I Zone 1; AEx e IIC T* *-40°C ≤ Tamb ≤ 55°C*	*Ⓔ II 2 G Ex e IIC T6-T3* ① *Gb* *Ⓔ II 2 D Ex tb IIIC T80°-T195° C* *-40° C ≤ Tamb ≤ +55° C*

Applications

- The Splice Connection Kit is designed to connect two heater cables to each other in a splice configuration
- This kit may be used to extend cable length, connect different wattage cables together or to provide access to service removable equipment
- The AXSC100 is designed per NEC/CEC requirements including standard terminal blocks sized for maximum 8 AWG wiring
- The EXSC100 is designed per IEC requirements including standard terminal blocks sized for maximum 6mm² wiring
- The HSC100 is a splice kit that is offered without an enclosure for the customers who provide the connection enclosure separately
- Kits are used to connect and terminate Nelson self-regulating heater cable series LT-J, LT-JT, HLT-J, XLT-J, LLT-J and CLT-JT ②

Features

- The enclosure must be rated to meet the specifics of the installed environment
- Global-reach industrial-grade universal connection kits for Hazardous Locations
- Certified for NEC/CEC (AX Series) and IEC (EX Series) installations
- Incorporate rugged, non-metallic construction rated for IP66 / NEMA 4X
- Designed with corrosion resistant, anti-static enclosures and components
- Easy entry and connectivity with terminal blocks and DIN rails
- Fit all wattages of Nelson LT-J, LT-JT, HLT-J, XLT-J, LLT-J and CLT-JT series self-regulating heater cables
- Min Installation Temp: -40°C (-40°F)
- Temp Use Range: -50°C to +55°C (-58°F to +131°F) ambient
- Conductor Size: 1 mm² (18 AWG) to 6 mm² (8 AWG)
- Voltage Range: 300 Vac Maximum
- Ingress Protection: NEMA 4X, IP66
- Max Amperage: 14 A CLT Series, 18 A LT Series, HLT Series, 25 A XLT Series and 38A LLT Series
- Enclosure Material: Glass reinforced, carbon-loaded, polyester, UV resistant, polymer
- Weight: 1 kg (2.2 lbs)

Accessories

- Pipe clamp to secure standoff to pipe (one is included in each kit):
  - PC03 – 80 mm (3 in) and smaller pipe
  - PC12 – 80 mm (3 in) to 12 inch (300 mm) pipe
  - PC20 – 300 mm (12 in) to 20 inch (500 mm) pipe
- Small pipe adapter: HC-SPA – 25 mm (1.0 in) and smaller pipe

Ordering Information

- One kit should be ordered for each type of connection needed
- A pipe clamp of the appropriate size for the pipe must be selected (-3 for PC03, -12 for PC12, -20 for PC20) for each connection kit
- A small pipe adapter kit must be ordered for each kit for installation on 25 mm (1 inch) or smaller pipe



Dimensions in Millimeters (Inches)

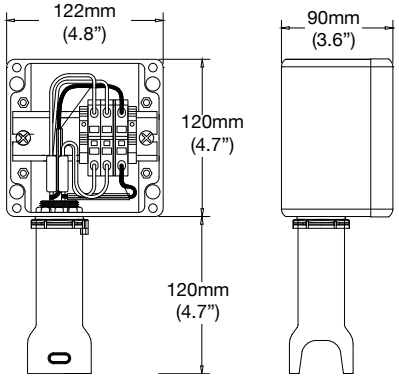

Certifications and Compliances

- UL Standard: 50 Ed. 12
- UL Listed: E53501, E49805
- CSA Standard: C22.2 No. 130-16, C22.2 No. 94-R2011, C22.2 No. 213-16
- CSA Certified: LR42103, LR42104
- FM Standard: 3600:2011, 3611:2004, 3616:2011
- FM Approved: 3047182
- ATEX Certified: 07ATEX0124
- IECEx Certified: KEM 07.0041
- Other Standards: IEC/IEEE 60079-30-1:2015, IEC 60529:2004, 60079-0:2011, 60079-7:2006, 60079-31:2013, IEEE 515-2011, IEEE 515.1-2012, ANSI/ISA 12.12.01-2015

① For temperature code, see heating cable or design information
② Ordinary (Unclassified) Location Only

© March 2019

Type AX/EX Series Splice Connection Kits

UL:	CSA:	FM:	ATEX:
Class I, Division 2, Groups A, B, C, D *Class II, Division 2, Groups F, G* *Class III, Division 1 and 2*	*Class I, Division 2, Groups B, C, D* *Class II, Groups E, F, G (Canada Only)* *Class III (Canada Only)* *Enclosure Type 4X, Temperature Code T6 – T3* *Class I, Zone 1; Ex e II; T6 – T3* ①	*Class I, Division 2, Groups B, C, D* *Class II, Groups E, F, G; Class III* *Enclosure Type 4X, IP66,* *Temperature Code T* ① *Class I Zone 1; AEx e IIC T* *-40°C ≤ Tamb ≤ 55°C*	*Ⓔx II 2 G Ex e IIC T6-T3* ① *Gb* *Ⓔx II 2 D Ex tb IIIC T80°-T195° C* *-40° C ≤ Tamb ≤ +55° C*

Selection Table

Kit Contents	AXSC100 ②	HSC100	EXSC100 ②
Junction Box, Lid, and Terminal Block	1	N/A	1
Standoff	1	1	1
6” Guide Tubes	4	4	4
Enclosure Adapter	1	1	1
Silicone Power Termination Fitting	2	2	2
Silicone Adhesive	1	1	1
Locknut	1	1	1
Cable Grommets	1	1	1
Green Wire Tubing	2	2	2
Cable Tie	1	1	1

① *For temperature code, see heating cable or design information.*
② *Suffix **-LLT** for use with LLT Long Line Self-Regulating Heaters.*

Visit our website at www.nelsonheaters.com or contact us at United States: (800) 621-1506 | Europe: +33.3.22.54.13.90.
© March 2019
EMERSON

Type AX/EX Series Tee Connection Kits

UL:	CSA:	FM:	ATEX:
Class I, Division 2, Groups A, B, C, D *Class II, Division 2, Groups F, G* *Class III, Division 1 and 2*	*Class I, Division 2, Groups B, C, D* *Class II, Groups E, F, G (Canada Only)* *Class III (Canada Only)* *Enclosure Type 4X, Temperature Code T6 – T3* *Class I, Zone 1; Ex e II; T6 – T3* ①	*Class I, Division 2, Groups B, C, D* *Class II, Groups E, F, G; Class III* *Enclosure Type 4X, IP66, Temperature Code T* ① *Class I Zone 1; AEx e IIC T* *-40°C ≤ Tamb ≤ 55°C*	*Ⓔx II 2 G Ex e IIC T6-T3* ① *Gb* *Ⓔx II 2 D Ex tb IIIC T80°-T195° C* *-40° C ≤ Tamb ≤ +55° C*

Applications

- The Tee Splice Connection kit is designed to connect up to three heater cables
- It may be used to connect multiple heater segments, connect different wattage cables together or to provide access to service removable equipment
- The AXTC125 is designed per NEC/CEC requirements including standard terminal blocks sized for maximum 8 AWG wiring
- The EXTC125 is designed per IEC requirements including standard terminal blocks sized for maximum 6mm² wiring
- The HTC125 is a tee kit that is offered without an enclosure for the customers who provide the connection enclosure separately
- Kits are used to connect and terminate Nelson self-regulating heater cable series LT-J, LT-JT, HLT-J, XLT-J and CLT-JT ②

Features

- The enclosure must be rated to meet the specifics of the installed environment.
- Global-reach industrial-grade universal connection kits for Hazardous Locations
- Certified for NEC/CEC (AX Series) and IEC (EX Series) installations
- Incorporate rugged, non-metallic construction rated for IP66 / NEMA 4X
- Designed with corrosion resistant, anti-static enclosures and components
- Easy entry and connectivity with terminal blocks and DIN rails
- Fit all wattages of Nelson LT-J, LT-JT, HLT-J, XLT-J and CLT-JT series self-regulating heater cables
- Min Installation Temp: -40°C (-40°F)
- Temp Use Range: -50°C to +55°C (-58°F to +131°F) ambient
- Conductor Size: 1 mm² (18 AWG) to 6 mm² (8 AWG)
- Voltage Range: 300 Vac Maximum
- Ingress Protection: NEMA 4X, IP66
- Max Amperage: 14A CLT Series, 18A LT, HLT Series, 25A XLT Series
- Enclosure Material: Glass reinforced, carbon-loaded, polyester, UV resistant, polymer
- Weight: 2 kg (4.4 lbs)

Accessories

- Pipe clamp to secure standoff to pipe (one is included in each kit):
  - PC03 – 80 mm (3 in) and smaller pipe
  - PC12 – 80 mm (3 in) to 12 inch (300 mm) pipe
  - PC20 – 300 mm (12 in) to 20 inch (500 mm) pipe
- Small pipe adapter: HC-SPA – 25 mm (1.0 in) and smaller pipe

Ordering Information

- One kit should be ordered for each type of connection needed
- A pipe clamp of the appropriate size for the pipe must be selected (-3 for PC03, -12 for PC12, -20 for PC20) for each connection kit
- A small pipe adapter kit must be ordered for each kit for installation on 25mm (1 inch) or smaller pipe



Dimensions in Millimeters (Inches)

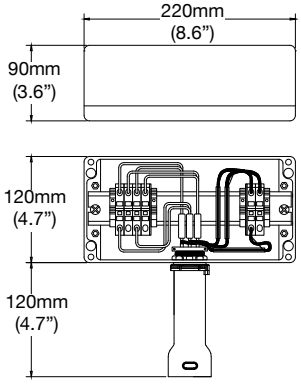

Certifications and Compliances

- UL Standard: 50 Ed. 12
- UL Listed: E53501, E49805
- CSA Standard: C22.2 No. 130-16, C22.2 No. 94-R2011, C22.2 No. 213-16
- CSA Certified: LR42103, LR42104
- FM Standard: 3600:2011, 3611:2004, 3616:2011
- FM Approved: 3047182
- ATEX Certified: 07ATEX0124
- IECEx Certified: KEM 07.0041
- Other Standards: IEC/IEEE 60079-30-1:2015, IEC 60529:2004, 60079-0:2011, 60079-7:2006, 60079-31:2013, IEEE 515-2011, IEEE 515.1-2012, ANSI/ISA 12.12.01-2015

① For temperature code, see heating cable or design information
② Ordinary (Unclassified) Location Only

© March 2019

Type AX/EX Series Tee Connection Kits

UL:	CSA:	FM:	ATEX:
Class I, Division 2, Groups A, B, C, D *Class II, Division 2, Groups F, G* *Class III, Division 1 and 2*	*Class I, Division 2, Groups B, C, D* *Class II, Groups E, F, G (Canada Only)* *Class III (Canada Only)* *Enclosure Type 4X, Temperature Code T6 – T3* *Class I, Zone 1; Ex e II; T6 – T3* ①	*Class I, Division 2, Groups B, C, D* *Class II, Groups E, F, G; Class III* *Enclosure Type 4X, IP66,* *Temperature Code T* ① *Class I Zone 1; AEx e IIC T* *-40°C ≤ Tamb ≤ 55°C*	*Ⓔx II 2 G Ex e IIC T6-T3* ① *Gb* *Ⓔx II 2 D Ex tb IIIC T80°-T195° C* *-40° C ≤ Tamb ≤ +55° C*

Selection Table

Kit Contents	AXTC125	EXTC125	HTC125
Junction Box, Lid, and Terminal Block	1	1	N/A
Standoff	1	1	1
6” Guide Tubes	6	6	6
Enclosure Adapter	1	1	1
Silicone End Termination Fitting	2	2	2
Silicone Power Termination Fitting	3	3	3
Silicone Adhesive	1	1	1
Cable Clamp	1	1	1
Locknut	1	1	1
Cable Grommets	1	1	1
Green Wire Tubing	3	3	3
Cable Tie	1	1	1

① *For temperature code, see heating cable or design information.*

Visit our website at www.nelsonheaters.com or contact us at United States: (800) 621-1506 | Europe: +33.3.22.54.13.90.
© March 2019

Type AX/EX Series Powered Splice Connection Kits

UL:	CSA:	FM:	ATEX:
Class I, Division 2, Groups A, B, C, D *Class II, Division 2, Groups F, G* *Class III, Division 1 and 2*	*Class I, Division 2, Groups B, C, D* *Class II, Groups E, F, G (Canada Only)* *Class III (Canada Only)* *Enclosure Type 4X, Temperature Code T6 – T3* *Class I, Zone 1; Ex e II; T6 – T3* ①	*Class I, Division 2, Groups B, C, D* *Class II, Groups E, F, G; Class III* *Enclosure Type 4X, IP66,* *Temperature Code T* ① *Class I Zone 1; AEx e IIC T* *-40°C ≤ Tamb ≤ 55°C*	*Ⓔx II 2 G Ex e IIC T6-T3* ① *Gb* *Ⓔx II 2 D Ex tb IIIC T80°-T195° C* *-40° C ≤ Tamb ≤ +55° C*

Applications

- The Powered Splice Connection Kit is designed to connect up to three heater cables to customer supplied power wiring
- The AXPTC125 is designed per NEC/CEC requirements and provides entries compatible with 3/4" NPT conduit entry
  - Standard terminal blocks are sized for maximum 8 AWG power supply wiring
- The EXPTC125 is designed per IEC requirements and it provides entries compatible with M25 threaded glands and fittings
  - Standard terminal blocks are sized for maximum 6mm² power supply wiring
- Kits are used to connect and terminate Nelson self-regulating heater cable series LT-J, LT-JT, HLT-J, XLT-J and CLT-JT ②

Features

- The enclosure must be rated to meet the specifics of the installed environment
- Global-reach industrial-grade universal connection kits for Hazardous Locations
- Certified for NEC/CEC (AX Series) and IEC (EX Series) installations
- Incorporate rugged, non-metallic construction rated for IP66 / NEMA 4X
- Designed with corrosion resistant, anti-static enclosures and components
- Fit all wattages of Nelson LT-J, LT-JT, HLT-J, XLT-J and CLT-JT series self-regulating heater cables
- Min Installation Temp: -40°C (-40°F)
- Temp Use Range: -50°C to +55°C (-58°F to 131°F) ambient
- Conductor Size: 1 mm² (18 AWG) to 6 mm² (8 AWG)
- Voltage Range: 300 Vac Maximum
- Ingress Protection: NEMA 4X, IP66
- Max Amperage: 14A CLT Series, 18A LT Series, HLT Series, 25A XLT Series
- Enclosure Material: Glass reinforced, carbon-loaded, polyester, UV resistant, polymer
- Weight: 2 kg (4.4 lbs)

Accessories

- Pipe clamp to secure standoff to pipe (one is included in each kit):
  - PC03 – 80 mm (3 in) and smaller pipe
  - PC12 – 80 mm (3 in) to 12 inch (300 mm) pipe
  - PC20 – 300 mm (12 in) to 20 inch (500 mm) pipe
- Small pipe adapter: HC-SPA – 25 mm (1.0 in) and smaller pipe

Ordering Information

- One kit should be ordered for each type of connection needed
- A pipe clamp of the appropriate size for the pipe must be selected (-3 for PC03, -12 for PC12, -20 for PC20) for each connection kit
- A small pipe adapter kit must be ordered for each kit for installation on 25mm (1") or smaller pipe



Dimensions in Millimeters (Inches)

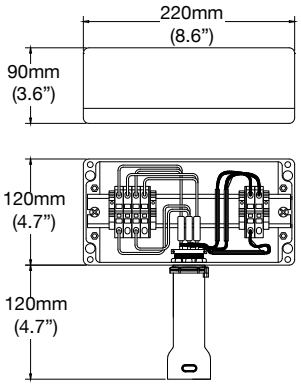

Certifications and Compliances

- UL Standard: 50 Ed. 12
- UL Listed: E53501, E49805
- CSA Standard: C22.2 No. 130-16, C22.2 No. 94-R2011, C22.2 No. 213-16
- CSA Certified: LR42103, LR42104
- FM Standard: 3600:2011, 3611:2004, 3616:2011
- FM Approved: 3047182
- ATEX Certified: 07ATEX0124
- IECEx Certified: KEM 07.0041
- Other Standards: IEC/IEEE 60079-30-1:2015, IEC 60529:2004, 60079-0:2011, 60079-7:2006, 60079-31:2013, IEEE 515-2011, IEEE 515.1-2012, ANSI/ISA 12.12.01-2015

① For temperature code, see heating cable or design information
② Ordinary (Unclassified) Location Only

© March 2019

Type AX/EX Series Powered Splice Connection Kits

UL:	CSA:	FM:	ATEX:
Class I, Division 2, Groups A, B, C, D *Class II, Division 2, Groups F, G* *Class III, Division 1 and 2*	*Class I, Division 2, Groups B, C, D* *Class II, Groups E, F, G (Canada Only)* *Class III (Canada Only)* *Enclosure Type 4X, Temperature Code T6 – T3* *Class I, Zone 1; Ex e II; T6 – T3* ①	*Class I, Division 2, Groups B, C, D* *Class II, Groups E, F, G; Class III* *Enclosure Type 4X, IP66,* *Temperature Code T* ① *Class I Zone 1; AEx e IIC T* *-40°C ≤ Tamb ≤ 55°C*	*Ⓔx II 2 G Ex e IIC T6-T3* ① *Gb* *Ⓔx II 2 D Ex tb IIIC T80°-T195° C* *-40° C ≤ Tamb ≤ +55° C*

Selection Table

Kit Contents	AXPTC125	EXPTC125
Junction Box, Lid, and Terminal Block	with ¾" NPT entry	with M25 threaded entry
Standoff	1	1
6" Guide Tubes	6	6
Enclosure Adapter	1	1
Silicone End Termination Fitting	3	3
Silicone Power Termination Fitting	3	3
Silicone Adhesive	1	1
Cable Clamp	1	1
Locknut	1	1
Cable Grommets	1	1
Green Wire Tubing	3	3
Cable Tie	1	1

① *For temperature code, see heating cable or design information*

© March 2019

Type AX/EX Series End of Circuit Termination Kits

UL:	CSA:	FM:	ATEX:
Class I, Division 2, Groups A, B, C, D *Class II, Division 2, Groups F, G* *Class III, Division 1 and 2*	*Class I, Division 2, Groups B, C, D* *Class II, Groups E, F, G (Canada Only)* *Class III (Canada Only)* *Enclosure Type 4X, Temperature Code T6 – T3* *Class I, Zone 1; Ex e II; T6 – T3* ①	*Class I, Division 2, Groups B, C, D* *Class II, Groups E, F, G; Class III* *Enclosure Type 4X, IP66, Temperature Code T* ① *Class I Zone 1; AEx e IIC T* *-40°C ≤ Tamb ≤ 55°C*	*Ⓔx II 2 G Ex e IIC T6-T3* ① *Gb* *Ⓔx II 2 D Ex tb IIIC T80°-T195° C* *-40° C ≤ Tamb ≤ +55° C*

Applications

- The HEC100 End of Circuit Termination Kit is designed for terminating one heater cable while allowing access for periodic maintenance and/or trouble-shooting
- Kits are used to connect and terminate Nelson self-regulating heater cable series LT-J, LT-JT, HLT-J, XLT-J, LLT-J and CLT-JT ②

Features

- Global-reach industrial-grade universal connection kits for Hazardous Locations
- Certified for NEC/CEC (AX Series) and IEC (EX Series) installations
- Incorporate rugged, non-metallic construction rated for IP66 / NEMA 4X
- Designed with corrosion resistant, anti-static enclosures and components
- Fit all wattages of Nelson LT-J, LT-JT, HLT-J, XLT-J, LLT-J and CLT-JT series self-regulating heater cables
- Min Installation Temp: -40°C (-40°F)
- Temp Use Range: -50°C to +55°C (-58°F to 131°F) ambient
- Conductor Size: 1 mm^2 (18 AWG) to 6 mm^2 (8 AWG)
- Voltage Range: 300 Vac Maximum
- Ingress Protection: NEMA 4X, IP66
- Max Amperage: 14A CLT Series, 18A LT, HLT Series, 25A XLT Series and 38A LLT Series
- Enclosure Material: Glass reinforced, carbon-loaded, polyester, UV resistant, polymer
- Weight: 0.4 kg (0.8 lb)

Accessories

- Pipe clamp to secure standoff to pipe (one is included in each kit):
  - PC03 – 80 mm (3 in) and smaller pipe
  - PC12 – 80 mm (3 in) to 12 inch (300 mm) pipe
  - PC20 – 300 mm (12 in) to 20 inch (500 mm) pipe
- Small pipe adapter: HC-SPA – 25 mm (1.0 in) and smaller pipe

Ordering Information

- One kit should be ordered for each type of connection needed
- A pipe clamp of the appropriate size for the pipe must be selected (-3 for PC03, -12 for PC12, -20 for PC20) for each connection kit
- A small pipe adapter kit must be ordered for each kit for installation on 25mm (1”) or smaller pipe



Dimensions in Millimeters (Inches)

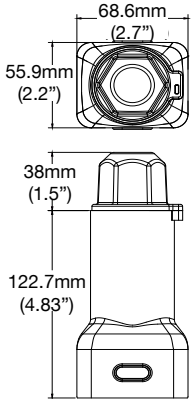

Certifications and Compliances

- UL Standard: 50 Ed. 12
- UL Listed: E53501, E49805
- CSA Standard: C22.2 No. 130-16, C22.2 No. 94-R2011, C22.2 No. 213-16
- CSA Certified: LR42103, LR42104
- FM Standard: 3600:2011, 3611:2004, 3616:2011
- FM Approved: 3047182
- ATEX Certified: 07ATEX0124
- IECEx Certified: KEM 07.0041
- Other Standards: IEEE 515-2011, IEEE 515.1-2012, IEC/IEEE 60079-30-1:2015, IEC 60529:2004, 60079-0:2011, 60079-7:2006, 60079-31:2013, ANSI/ISA 12.12.01-2015

① For temperature code, see heating cable or design information
② Ordinary (Unclassified) Location Only

© March 2019

Type AX/EX Series End of Circuit Termination Kits

UL:	CSA:	FM:	ATEX:
Class I, Division 2, Groups A, B, C, D *Class II, Division 2, Groups F, G* *Class III, Division 1 and 2*	*Class I, Division 2, Groups B, C, D* *Class II, Groups E, F, G (Canada Only)* *Class III (Canada Only)* *Enclosure Type 4X, Temperature Code T6 – T3* *Class I, Zone 1; Ex e II; T6 – T3* ①	*Class I, Division 2, Groups B, C, D* *Class II, Groups E, F, G; Class III* *Enclosure Type 4X, IP66,* *Temperature Code T* ① *Class I Zone 1; AEx e IIC T* *-40°C ≤ Tamb ≤ 55°C*	*Ⓔx II 2 G Ex e IIC T6-T3* ① *Gb* *Ⓔx II 2 D Ex tb IIIC T80°-T195° C* *-40° C ≤ Tamb ≤ +55° C*

Selection Table

Kit Contents	HEC100 ②
End Cap	1
Standoff	1
Silicone End Termination Fitting	1
Silicone Adhesive	1
Cable Grommet	1
Locknut	1
Cable Tie	1

① *For temperature code, see heating cable or design information.*
② *Suffix* ***-LLT*** *for use with LLT Long Line Self-Regulating Heaters.*

© March 2019

Type AX/EX Series Lighted End of Circuit Termination Kits

UL:	CSA:	FM:	ATEX/IECEx:
Class I, Division 2, Groups A, B, C, D	*Class I, Division 2, Groups B, C, D*	*Class I, Division 2, Groups B, C, D*	*ATEX 07ATEX0124, IECEx KEM 07.0041*
Class II, Division 2, Groups F, G	*Class II, Groups E, F, G (Canada Only)*	*Class II, Groups E, F, G*	*Ex eb mb IIC T6 – T3 Gb*
Class III, Division 1 and 2	*Class III (Canada Only)*	*Class III*	*Ex tb IIIC T80 °C T195 °C Db*
	Enclosure Type 4X,	*Enclosure Type 4X, IP66, Temperature Code T①*	*-40°C ≤ Tamb ≤ 55°C IP66*
	Temperature Code T6 – T3	*Class I Zone 1; AEx e IIC T*	
	Class I, Zone 1; Ex e II; T6 – T3 ①	*-40°C ≤ Tamb ≤ 55°C*	

Applications

- The HEL100 Lighted End of Circuit Termination Kit is designed for terminating one heater cable with a non-directional lens assembly and long life LED output
- Kits are used to connect and terminate Nelson self-regulating heater cable series LT-J, LT-JT, HLT-J, XLT-J and CLT-JT ②

Features

- Global-reach industrial-grade universal connection kits for Hazardous Locations
- Certified for NEC/CEC (AX Series) and IEC (EX Series) installations
- Incorporate rugged, non-metallic construction rated for IP66 / NEMA 4X
- Designed with corrosion resistant, anti-static enclosures and components
- Fit all wattages of Nelson LT-J, LT-JT, HLT-J, XLT-J and CLT-JT series self-regulating heater cables
- Minimum Installation Temperature: -40°C (-40°F)
- Temperature Use Range: -40°C to +55°C (-40°F to +131°F) ambient
- Conductor Size: 1 mm^2 (18 AWG) to 6 mm^2 (8 AWG)
- Voltage Range: 300 Vac Maximum
- Ingress Protection: NEMA 4X, IP66
- Max Amperage: 14A CLT Series, 18A LT, HLT Series, 25A XLT Series
- Enclosure Material: Glass reinforced, carbon-loaded, polyester, UV resistant, polymer
- Weight: 0.4 kg (0.8 lb)

Accessories

- Pipe clamp to secure standoff to pipe (one is included in each kit):
  - PC03 – 80 mm (3 in) and smaller pipe
  - PC12 – 80 mm (3 in) to 12 inch (300 mm) pipe
  - PC20 – 300 mm (12 in) to 20 inch (500 mm) pipe
- Small pipe adapter: HC-SPA – 25 mm (1.0 in) and smaller pipe



Ordering Information

- One kit should be ordered for each type of connection needed
- A pipe clamp of the appropriate size for the pipe must be selected (-3 for PC03, -12 for PC12, -20 for PC20) for each connection kit
- A small pipe adapter kit must be ordered for each kit for installation on 25mm (1") or smaller pipe

Certifications and Compliances

- UL Standard: 50 Ed. 12
- UL Listed: E53501, E49805
- CSA Standard: C22.2 No. 130-16, C22.2 No. 94-R2011, C22.2 No. 213-16
- CSA Certified: LR42103, LR42104
- FM Standard: 3600:2011, 3611:2004, 3616:2011
- FM Approved: 3047182
- Other Standards: IEEE 515-2011, IEEE 515.1-2012, IEC/IEEE 60079-30-1:2015, IEC 60529:2004, 60079-0:2011, 60079-7:2006, 60079-31:2013, ANSI/ISA 12.12.01-2015

Selection Table

Kit Contents	HEL100
Lighted End Cap	1
Standoff	1
Silicone Power Termination Fitting	1
Silicone Adhesive	1
Cable Grommet	1
Locknut	1
Cable Tie	1

① For temperature code, see heating cable or design information
② Ordinary (Unclassified) Location Only

© March 2019

HASK Series Connection Kits

UL:
Class I, Division 1, Groups B, C, D Class II, Division 1, Groups E, F, G
Class III

CSA:
Class I, Division 1, Groups B, C, D
Class II, Division 1, Groups E, F, G
Class III
Class I, Zone 1, IIB

FM:
Class I, Division 1, Groups B, C, D
Class II, Division 1, Groups E, F, G
Class III
Class I, Zone 1, IIB

Applications

- HASK Series connection kits are approved for use with all Nelson LT, HLT, XLT Series field-fabricated heating cables.
- Approved for use in Class I, Division 1 hazardous areas when used with approved Nelson heating cables.

Features

- HASK-P Power Connection Kit is suitable for connecting one heating cable to customer supplied power wiring.
  - Kit Contents:
    - 1 Approved XP Junction Box, Seal Fitting, Sealing Compound and Packing Fiber
    - 1 Aluminum Standoff
    - 1 Grommet
    - 1 Power Termination with Adhesive Sealant
    - 1 3-Point Floating Terminal Block
    - 1 Pipe Plug
    - 2 Stainless Steel Pipe Clamps (Specify Pipe Size)
- HASK-E End Connection Kit is suitable for terminating one heating cable in a CI, D1 heat tracing system.
  - Kit Contents:
    - 1 Approved XP Junction Box, Seal Fitting, Sealing Compound and Packing Fiber
    - 1 Aluminum Standoff
    - 1 Grommet
    - 1 Power Termination with Adhesive Sealant
    - 1 3-Point Floating Terminal Block
    - 2 Pipe Plugs
    - 2 Stainless Steel Pipe Clamps (Specify Pipe Size)
- HASK-S Splice Connection Kit is designed for connecting two heating cables in an in-line splice configuration.
  - Kit Contents:
    - 1 Approved XP Junction Box
    - 2 Seal Fittings, Reducers, Sealing Compound and Packing Fiber
    - 2 Cable Entry Seals with Grommets
    - 2 Power Terminations with Adhesive Sealant
    - 1 3-Point Floating Terminal Block
    - 1 Pipe Plug
    - 2 Stainless Steel Pipe Clamps (Specify Pipe Size)
- HASK-T Tee Connection Kit is designed for connecting three heating cables in a tee splice configuration.
  - Kit Contents:
    - 1 Approved XP Junction Box
    - 3 Seal Fittings, Reducers, Sealing Compound and Packing Fiber
    - 3 Cable Entry Seals with Grommets
    - 3 Power Terminations with Adhesive Sealant
    - 1 3-Point Floating Terminal Block
    - 3 Stainless Steel Pipe Clamps (Specify Pipe Size)

Certifications and Compliances

- Nelson's HASK Series connection kits are Factory Mutual and Canadian Standards Association approved.



HASK–P



HASK–E



HASK–S



HASK–T

© March 2019

HASK Series Connection Kits

UL:
Class I, Division 1, Groups B, C, D Class II, Division 1, Groups E, F, G Class III

CSA:
Class I, Division 1, Groups B, C, D Class II, Division 1, Groups E, F, G Class III Class I, Zone 1, IIB

FM:
Class I, Division 1, Groups B, C, D Class II, Division 1, Groups E, F, G Class III Class I, Zone 1, IIB

Nelson HASK Series connection kits include all components necessary to complete the installation of our full line of Class I, Division 1 heat tracing cables. The selection tables below allow for the proper specifying of the complete connection kit assembly (example: HASK - P - 12).

Catalog Numbering Guide

HASK

Product Family

P

Specify Kit Configuration

P - Power Connection
E - End Connection
S - Splice Connection
T - Tee Connection

12

Specify Pipe Size ②

3 – 19-75 mm (.75-3.0 in)
12 – 89-305 mm (3.5-12.0 in)
20 – 317-508 mm (12.5-20.0 in)

Note:
① Suitable for use with any approved industrial enclosure with a maximum wall thickness of 0.1875" or conduit outlet/junction box with 0.75" threaded hubs.

© March 2019

Modular Connection Systems Installation Diagram

Modular Connection System for IEC Installations

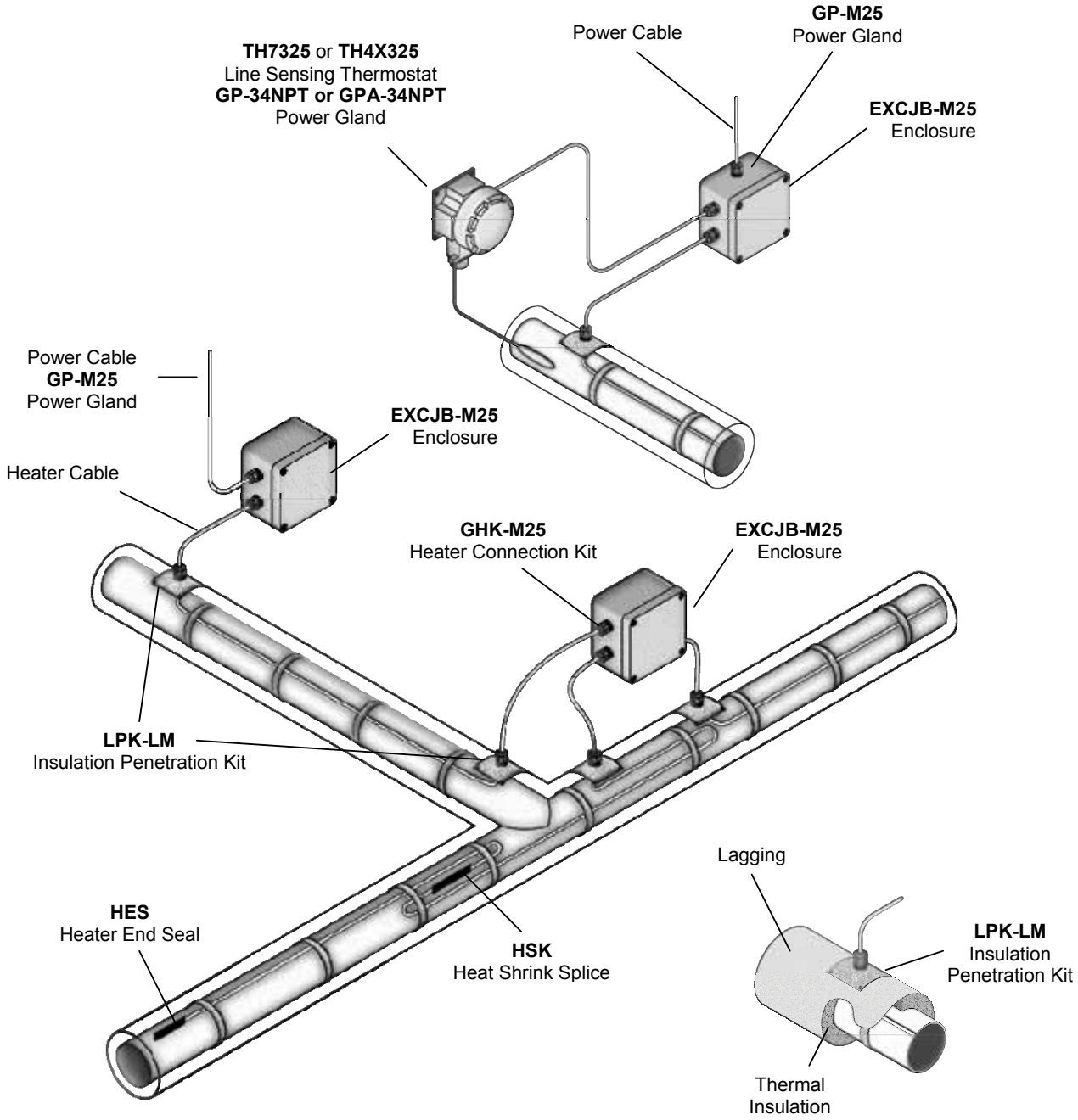

© March 2019

EXCJB21–M25 Terminal Enclosure

Modular System Accessories

ATEX:
Ⓔx II 2 G D Ex e II T6

Applications

- EXCJB21-M25 Series Carbon Loaded Glass Reinforced Polyester enclosure is suitable for use in Zone 1 and Zone 2 hazardous areas, offering protection to IP67.
- Designed for use as a power connection, powered splice or standard splice, the EXCJB21 can be either pipe or wall mounted.

Features

- Entry pattern: (1) M25 threaded opening on side and (2) M25 threaded openings on bottom with (1) blanking plug.
- Factory installed increased safety “e” terminals, (2) power and (1) ground to cover standard connection configurations.
- Connection kits, insulation entry kits and mounting brackets are ordered separately.
- Protection: IP67
- Dimensions: 122 mm x 120 mm x 90 mm (4.8 in x 4.7 in x 3.5 in)
- Entries: 3 x M25, 1 x M25 blanking plugs
- Minimum ambient temperature: -40°C (40°F)
- Terminals:
  - Klemsan AVK 6 Series; 2 Ex terminal block, 1 Ex ground terminal block
- Maximum conductor size: 10 mm^2 solid, 6 mm^2 stranded (0.016 in^2 solid, 0.009 in^2 stranded)
- Maximum operating voltage: 630 Vac
- Maximum current rating: 41 A

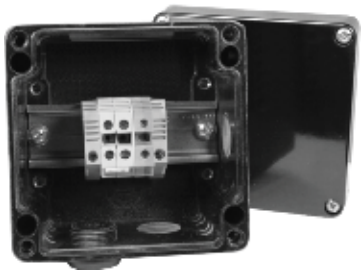

Options

- Heating cable connection kits: GHK-M25
- Insulation entry kits: LPK-LM, LPK-PM
- Heater cable gland: GH-M25
- Power cable gland: GP-M25
- Support brackets: BRK-V, BRK-H

Certifications and Compliances

- Sira: 99ATEX3173

Dimensions in Millimeters (Inches)

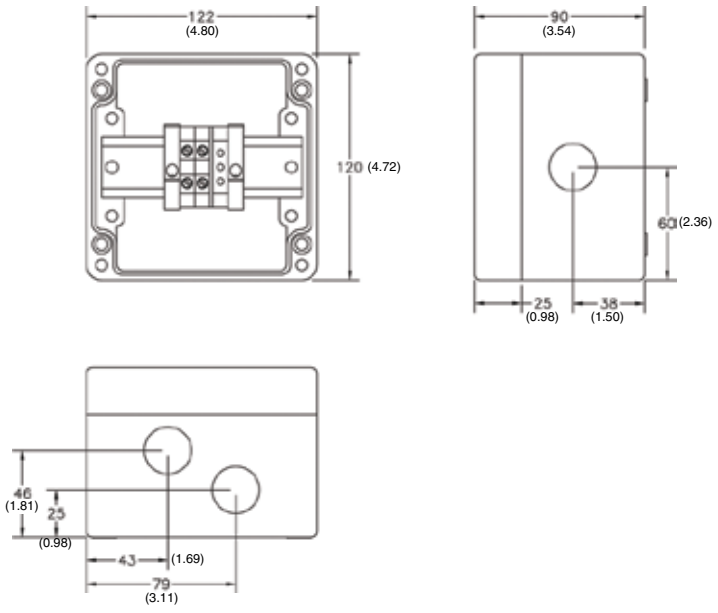

© March 2019

EXCJB31–M25 Terminal Enclosure

Modular System Accessories

ATEX:
Ⓔx II 2 G D Ex e II T6

Applications

- EXCJB31-M25 Series Carbon Loaded Glass Reinforced Polyester enclosure is suitable for use in Zone 1 and Zone 2 hazardous areas, offering protection to IP67.
- Designed for use as a power connection, powered splice, standard splice, powered tee or standard tee, the EXCJB31 can be either pipe or wall mounted.

Features

- Entry pattern: (1) M25 threaded opening on side and (3) M25 threaded openings on bottom with (2) blanking plugs.
- Factory installed increased safety “e” terminals, (4) power and (2) ground to cover standard connection configurations.
- Connection kits, insulation entry kits and mounting brackets are ordered separately.
- Protection: IP67
- Dimensions: 160 mm x 160 mm x 90 mm (6.3 in x 6.3 in x 3.5 in)
- Entries: 4 x M25, 2 x M25 blanking plugs
- Minimum ambient temperature: -40°C (-40°F)
- Terminals:
  - Klemsan AVK 6 Series; 4 Ex terminal block, 2 Ex ground terminal block
- Maximum conductor size: 10 mm^2 solid, 6 mm^2 stranded (0.016 in^2 solid, 0.009 in^2 stranded)
- Maximum operating voltage: 630 Vac
- Maximum current rating: 41 A

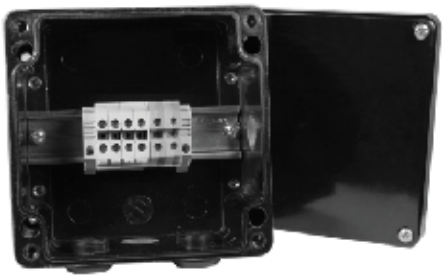

Options

- Heating cable connection kits: GHK-M25
- Insulation entry kits: LPK-LM, LPK-PM
- Heater cable gland: GH-M25
- Power cable gland: GP-M25
- Support brackets: BRK-V, BRK-H

Certifications and Compliances

- Sira: 99ATEX3173

Dimensions in Millimeters (Inches)

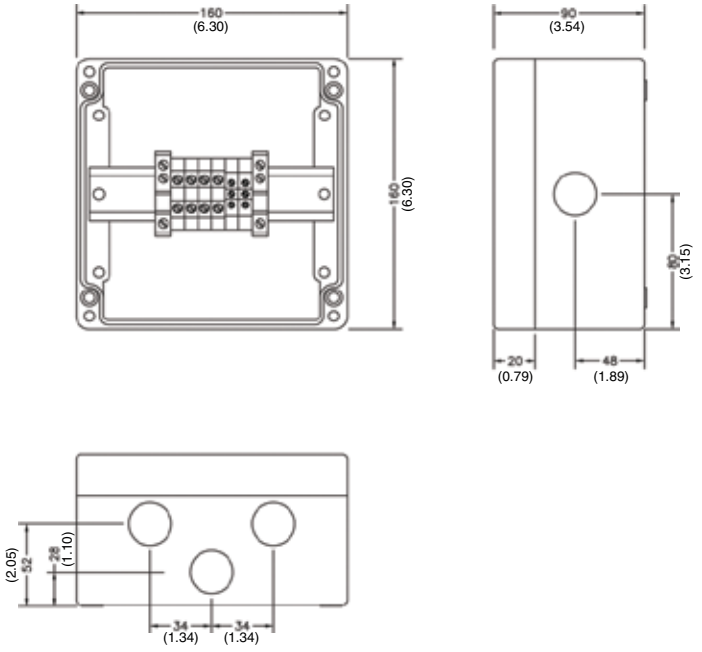

© March 2019

LPK–LM Insulation Entry Kit

Modular System Accessories



Applications

- The LPK-LM Insulation Entry Kit provides a watertight heater cable entry through an existing thermal insulation and lagging system.
- This kit is designed to be mounted directly on the lagging material and requires a minimum clearance hole of 40mm (1.56 in).
- This kit is suitable for use with all wattages of Nelson Heat Tracing Systems LT-J, LT-JT, HLT-J and XLT-J heater cables.

Features

- Kit Contents
  - 1 Cable Gland, .M25 thread
  - 1 Conduit Locknut
  - 1 Grommet, Heating Cable
  - 1 Mounting Plate, Stainless Steel
- Maximum exposure temperature - gland: 80°C (176°F)
- Mounting plate dimension: 50.8 x 50.8 mm (2 x 2 in)

© March 2019

HCSK Heater Cable Termination Kit

Modular System Accessories

CSA:
Ex e II -40ºC ≤ Tamb ≤ +55ºC

ATEX:
Ⓔx II 2 G D Ex e II T3-6

Applications

- The HCSK Heater Cable Termination Kit provides both an end seal and power end seal to terminate a single length of heating cable.
- This kit is designed for use with all wattages of Nelson Heat Tracing Systems LT-J, LT-JT, HLT-J and XLT-J heater cables.



Features

- Kit Contents
  - 1 Power Termination, 101.6 mm (4.0 in)
  - 1 End Seal
  - 1 Tube of Silicone
  - 1 G/Y Tubing, 9.5 mm (0.38 in) diameter, 152 mm (6.0 in) length
  - Maximum exposure temperature - standoff: +260 °C (+260 °F)

Certifications and Compliances

- CSA Certified: LR42104
- KEMA Certified: 07ATEX0124

© March 2019

Heater Cable Sealing Kits

Modular System Accessories

CSA:
Ex e II –40ºC ≤ Tamb ≤ +55ºC

ATEX:
Ⓔx II 2 GD Ex e II

HES

Applications

- Molded Silicone End Seal Termination Kit with Adhesive.
- Used for terminating the ends of field-fabricated heater cables.

Features

- Kit Contents
  - 1 End Seal
  - 1 Tube of Silicone

Certifications and Compliances

- CSA Listed: 1665370 / 1665383
- KEMA Certification: 03ATEX2020 X



HPS

Applications

- Molded Silicone Power End Termination Kit with Adhesive.
- Used for terminating field-fabricated heater cables inside the power connection box.

Features

- Kit Contents
  - 1 Power Termination
  - 1 Tube of Silicone
  - 1 G/Y Tubing, 9.5 mm (0.38 in) diameter, 152 mm (6 in) length
  - 2 Guide Tubes

Certifications and Compliances

- CSA Certified: LR42104
- KEMA Certified: 07ATEX0124



© March 2019

GHK–M25 Connection Kit

Modular System Accessories

CSA:
Ex e II –40ºC ≤ Tamb ≤ +55ºC

ATEX:
Ⓔx II 2 GD Ex e II

Applications

- The GHK-M25 Termination Kit provides heater cable terminations and watertight entry into an enclosure with minimum IP54 environmental ratings.
- The gland fitting is suitable for use with any approved enclosure with a maximum wall thickness of 4.7 6 mm (0.187 in) or with M25 threaded openings.
- A locknut is provided for use with non-threaded openings.
- This kit is designed for use with all wattages of Nelson Heat Tracing Systems LT-J, LT-JT, HLT-J and XLT-J heater cables.



Features

- Kit Contents
  - 1 Cable Gland, .M25 thread
  - 1 Locknut
  - 1 Sealing Grommet
  - 1 Power Termination, 101.6 mm (4.0 in)
  - 1 End Seal
  - 1 Tube of Silicone
  - 1 G/Y Tubing, 9.5 mm (0.38 in) diameter, 152 mm (6.0 in) length

Certifications and Compliances

- CSA Certified: LR42104
- KEMA Certified: 07ATEX0124

© March 2019

GH–M25 Entry Gland

Modular System Accessories

ATEX:
Ⓔx II 2 GD Ex e II
Ex e II 40ºC ≤ Tamb ≤ +55ºC

Applications

- The GH-M25 Gland provides a watertight entry into enclosure with minimum IP54 environmental ratings.
- This fitting is suitable for use with any approved enclosure with a maximum wall thickness of 4.76 mm (0.187 in) or with M25 threaded openings.
- This kit is designed for use with all wattages of Nelson Heat Tracing Systems LT-J, LT-JT, HLT-J and XLT-J heater cables.



Features

- Kit Contents
  - 1 Mounting Bracket
  - 4 Cheesehead Screws
  - 4 Nuts
  - 4 Plain Washers
  - 4 Lock Washers

Certifications and Compliances

- CSA Certified: LR42104
- KEMA Certified: 07ATEX0124

© March 2019

ATEX:
Ex d IIC
Ex e II
Ex tD A21 IP66/IP67
-60°C ≤ ta ≤ 100°C

GP-34NPT

Applications

- The GP-34NPT Gland Fitting provides a watertight entry into Nelson thermostats TA7140 and TH7325 with minimum IP66, IP67 and IP68 environmental ratings.
- Dual certified Flameproof and Increased Safety, cable gland for use in Zone 1, Zone 2, Zone 21 and Zone 22 hazardous areas with all types of unarmored cable.
- This kit is designed for use with cord ranges of 11.1-19.9 mm (.437-.783 in).

Features

- Kit Contents
  – 1 Cable Gland, .3/4” NPT thread

Certifications and Compliances

- IECEx Certification: BAS 09.0089X
- Baseefa Certification: 09ATEX0187X



GPA-34NPT

Applications

- The GPA-34NPT Gland Fitting provides a watertight entry into Nelson thermostats TA7140 and TH7325 with minimum IP66, IP67 and IP68 environmental ratings.
- Dual certified Flameproof and Increased Safety, cable gland for use in Zone 1, Zone 2, Zone 21 and Zone 22 hazardous areas with all types of armored and braided cable.
- This kit is designed for use with under armor cable diameters ranges of 11.1-19.9 mm (.437-.783 in) with overall cable diameters of 14.0-22.0 mm (.551-.876 in).

Features

- Kit Contents
  – 1 Cable Gland, .M25 thread

Certifications and Compliances

- IECEx Certification: BAS 09.0089X
- Baseefa Certification: 09ATEX0187X



© March 2019

Accessories for Field Fabricated Heater Cables

General Accessories

General Accessories for use with Type LT, HLT, XLT, CLT Self-Regulating Heating Cables

Molded Silicone Terminations

- LT-MP (-LLT for Type LLT heating cable)
  - Molded Silicone Power End Termination Kit with Adhesive. Used for terminating field-fabricated heater cables inside the power connection box. Each kit makes 5 complete terminations.
- LT-ME (-LLT for Type LLT heating cable)
  - Molded Silicone End Seal Termination Kit with Adhesive. Used for terminating the ends of field-fabricated heater cables. Each kit makes 5 complete terminations.

Heat Shrinkable Terminations

- LT-SP (Type LT/CLT)
- LT-HSP (Type HLT)
- LT-NSP (Type NC)
  Heat-Shrinkable Power End Termination Kit. Used for terminating field-fabricated heater cables inside the power connection box. Approved for use with Braided (-CB) product, in ordinary (unclassified) areas. (Exception: LT-SP kits may also be used with Over Jacketed (-JT) product.) Each kit makes 5 complete terminations.
- LT-SE (Type LT/CLT)
- LT-HSE (Type HLT)
- LT-NSE (Type NC)
  - Heat-Shrinkable End Seal Termination Kit. Used for terminating the ends of field-fabricated heater cables. Approved for use with Braided (-CB,) product, in ordinary (unclassified) areas. (Exception: LT-SE kits may also be used with Over Jacketed (-JT) product.) Each kit makes 5 complete terminations.

Pipe and Tank Adapters

- LT-P
  - Pipe Adapter Kit. Used to mount the base of PLT Series connection kits on small diameter (0.875" and below) pipe or tubing.
- LT-T
  - Tank Adapter Kit. Used to mount the base of PLT Series connection kits directly to the wall of a tank or vessel.
- HC-SPA
  - Pipe Adapter Kit. Used to mount the base of AX/EX Series connection kits on small diameter (1.315” and below) pipe or tubing.

End of Circuit Lights

- PLK-120, PLK-208, PLK-240, PLK-277
  - End of Circuit Light Assembly. Used with Nelson PLT-L connection kits.
- LB6R
  - Spare Replacement Bulb. For PLK series light assemblies

Conduit Entry Seals

- ES-B (Braided Heater)
- ES-J (Over Jacketed Heater)
- ES-U (Multiple (2) Cable Entry or Special Constructions
  - Waterproof Conduit Entry Seal, 0.5" NPT. Used for terminating field-fabricated heater cables when standard connection kits are not utilized.

Pipe Clamps

- PC-03 (3.0" Diameter and below)
- PC-12 (3.5" – 12.0" Diameter)
- PC-20 (12.5" – 20.0" Diameter)
  - Pipe Clamps, stainless steel. Used to attach connection kits to pipe.

Terminal Blocks

- TB-1 (3-Point)
- TB-4 (4-Point)
  - Floating Terminal Block. Used in any enclosure to provide positive, sure electrical connections. Rated 40 amps at 440 Vac, requires no lugs.

Universal Grommets

- PLT-U
  - Universal Grommet with Adhesive. Used with Nelson PLT-B kits for multiple (2) cable entry or special heater constructions.

Junction Box

- JB552
  - Non-Metallic Junction Box, 5" x 5" x 2", NEMA 4X. Used for terminating field-fabricated heating cables.

Warning Sign

- WS-100
  - Weatherproof Warning Sign. Used for cautioning maintenance personnel of the presence of electric heat tracing cable under the insulation. Attached to the outside of pipe insulation in frequent intervals. Black Lettering with Yellow background.

Tape

- GT-60 (60 Yards)
- GT-6 (20 Yards)
  - Fiberglass Tape, 0.5" wide. Used to attach heater cables to pipe or to attach temperature sensors to the pipe when corrosive conditions prevent the use of aluminum tape.
- AT-50 (50 Yards)
  - Aluminum Foil Tape, 2.0" wide. Used to attach heater cable to vessels to dissipate heat on non-metallic surfaces or to attach thermostat sensing bulbs to pipes.

© March 2019

BRK–V Vertical Support Bracket

General Accessories

Applications

- BRK-V is designed to mount standard enclosures or thermostats to suitable piping systems or metallic thermal insulation lagging.
- The BRK-V is manufactured of 304 stainless steel for use in most corrosive industrial environments.
- The bracket is mounted using 1 or 2 pipe clamps ordered separately.
- Enclosures are mounted utilizing the supplied hardware.

Features

- Kit Contents
  - 1 Mounting Bracket
  - 4 Cheesehead Screws
  - 4 Nuts
  - 4 Plain Washers
  - 4 Lock Washers

Options

- Enclosure Selection
  - EXCJB31-M25
  - EXCJBCP31-M25
  - EXCJB21-M25
  - EXCJB21CP-M25
  - JB22-M25
  - TF4X40
  - TH4X325
  - TH7325
  - TA4X140
  - TA7140

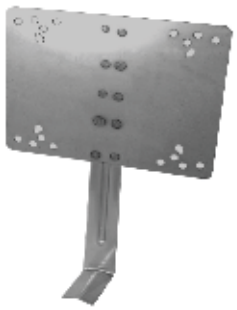

Outline

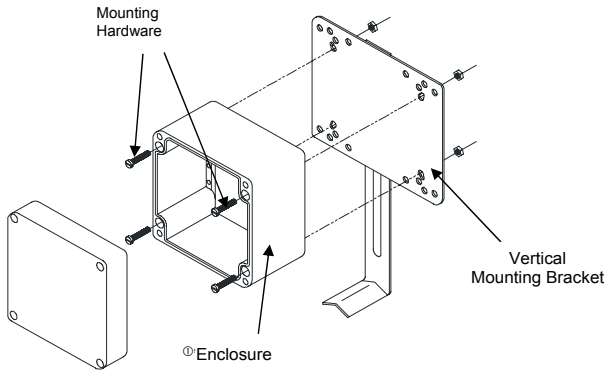

Dimensions in Millimeters (Inches)

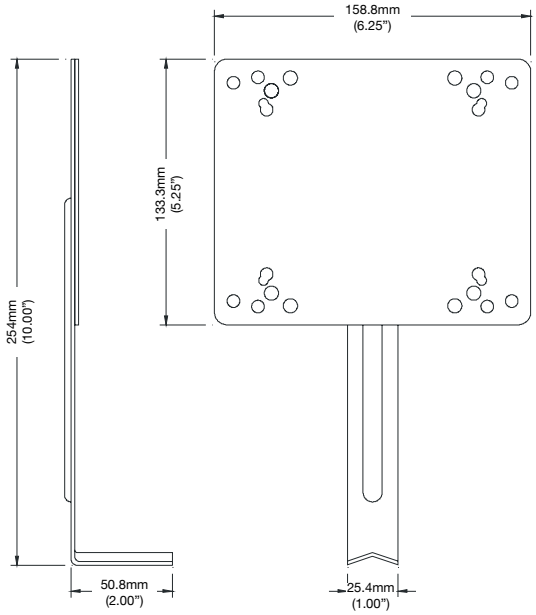

① *Items not included in kit*

© March 2019

BRK–H Horizontal Support Bracket

General Accessories

Applications

- BRK-H is designed to mount standard enclosures and thermostats to suitable piping systems or metallic thermal insulation lagging.
- The BRK-H is manufactured of 304 stainless steel for use in most corrosive industrial environments.
- The bracket is mounted using 2 pipe clamps ordered separately. Enclosures are mounted utilizing the supplied hardware.

Features

- Kit Contents
  - 1 Mounting Bracket
  - 4 Cheesehead Screws
  - 4 Nuts
  - 4 Plain Washers
  - 4 Lock Washers

Options

- Enclosure Selection:
  - EXCJB31-M25
  - EXCJBCP31-M25
  - EXCJB21-M25
  - EXCJB21CP-M25
  - JB22-M25
  - TF4X40
  - TH4X325
  - TH7325
  - TA4X140
  - TA7140



Outline

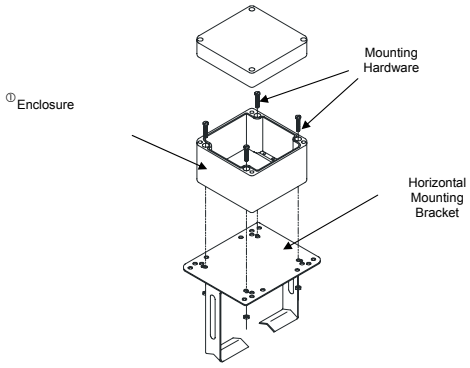

Dimensions in Millimeters (Inches)

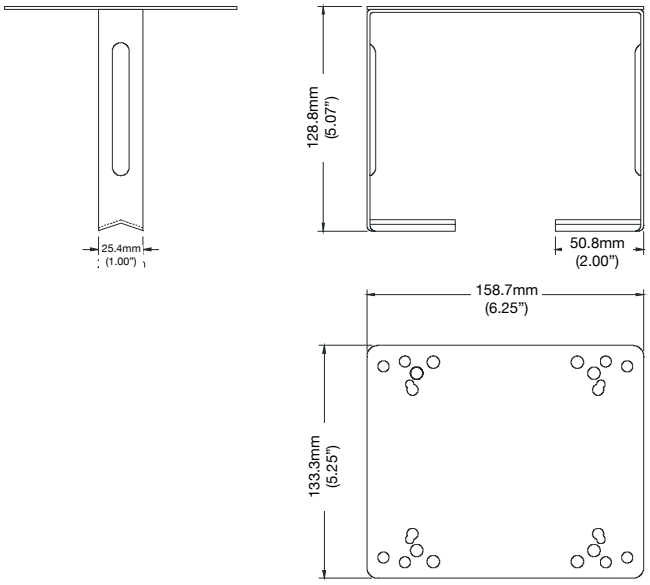

① *Items not included in kit*

© March 2019

NC Constant Wattage Heater Cable

FM:
Class I, Division 2, Groups B, C, D
Class II, Division 2, Groups F, G
Class III, Division 2

Application

- Nelson Type NC constant wattage heater cable is ideal for use in maintaining fluid flow under low ambient conditions.
- Freeze protection and process temperature maintenance systems such as product pipelines, process water, dust suppression systems, lube oil and condensate return are typical applications for this product.
- The base product is supplied with a tinned copper metal braid that may be used in both general applications and in dry, non-corrosive hazardous (classified) areas.
- It is also used to provide a conductive ground path when cable is installed on nonconductive surfaces, such as plastic or painted pipe.

Features

- Nelson Type NC constant wattage heater cable is a parallel resistance electric heater strip.
- A fluoropolymer sheath material is extruded over the two multi-stranded, nickel-plated, 12-gauge copper bus wires.
- The nichrome heating element is spirally applied around parallel construction and in contact with the bus wires at specific intervals known as zones.
- A fluoropolymer over jacket is then extruded over the construction to provide dielectric strength, moisture resistance, and for protection from impact and abrasion damage.
- A stranded tinned copper metal braid is supplied on all heaters
- An optional stainless steel braid is available for mechanical abuse situations.
- An optional fluoropolymer over jacket can be specified when the heater cable is to be installed in wet or corrosive environments.
- Nelson Heat Tracing Systems products are supplied with a limited warranty.

Operating Principle

- The parallel bus wires supply voltage along the entire length of the heater cable.
- A resistance wire heating element is spirally wrapped around bus wires contacting alternate bus wires at specific intervals forming heating zones.
- This series of parallel heating zones provides a constant power output for each zone, irrespective of where the cable is cut along the length of the bus wires.
- Each cable construction has the heating zone resistance sized to provide multiple power ratings when used on different voltages.
- This variation is accomplished using different spiral wrap spacing and heater zone lengths.
- There is no change of power output as the temperature changes, giving a steady power output anywhere in its recommended operating range.

Options

- Connection Kits for Power Connection, Tee Splice, Splices and End Seals (Nelson PLT Series)
- Thermostatic Controls (Nelson TA, TH, TE and HC Series)
- Junction Boxes, Tapes and Warning Signs
- Custom Control, Monitoring and Power Panels

Certifications and Compliances

- FM Approved: JI 1N0A8.AF
- Other Standards: IEEE 515-2004, IEEE 515.1-2005

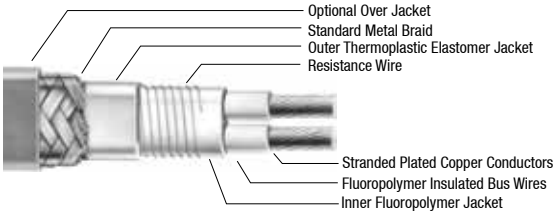

© March 2019

NC Constant Wattage Heater Cable

FM:
Class I, Division 2, Groups B, C, D
Class II, Division 2, Groups F, G
Class III, Division 2

Selection Table

Service Voltage	Watts/m (Watts/ft)	Maximum Segment Length m (ft)	Maximum Maintenance Temperature °C (°F)	Maximum Intermittent Exposure °C (°F)	T–Rating	Catalog Number
120	13.1 (4.0)	123 (405)	572 (300)	752 (400)	T3	
						NC4
208	39.4 (12.0)	123 (405)	302 (150)	752 (400)	T3	
120	26.2 (8.0)	87 (285)	410 (210)	752 (400)	T3	**NC8**
120	4.9 (1.5)	203 (665)	572 (300)	752 (400)	T3	
208	14.8 (4.5)	203 (665)	545 (285)	752 (400)	T3	
220	16.4 (5.0)	203 (665)	518 (270)	752 (400)	T3	**NC26**
240	19.7 (6.0)	203 (665)	473 (245)	752 (400)	T3	
277	26.2 (8.0)	203 (665)	410 (210)	752 (400)	T3	
120	8.2 (2.5)	157 (515)	572 (300)	752 (400)	T3	
208	24.6 (7.5)	157 (515)	419 (215)	752 (400)	T3	
						NC210
220	27.9 (8.5)	157 (515)	392 (200)	752 (400)	T3	
240	32.8 (10.0)	157 (515)	347 (175)	752 (400)	T3	
120	9.8 (3.0)	143 (470)	572 (300)	752 (400)	T3	
208	29.5 (9.0)	143 (470)	374 (190)	752 (400)	T3	
						NC212
220	32.8 (10.0)	143 (470)	347 (175)	752 (400)	T3	
240	39.4 (12.0)	143 (470)	302 (150)	752 (400)	T3	

© March 2019

NC Constant Wattage Heater Cable

FM:
Class I, Division 2, Groups B, C, D
Class II, Division 2, Groups F, G
Class III, Division 2

Circuit Breaker Selection

		Maximum Length in Meters (Feet) Vs. Circuit Breaker Size									
		115/120 Vac			208/220 Vac			240/277 Vac			
Voltage	Watts/m (Watts/ft)	15A	20A	30A	15A	20A	30A	15A	20A	30A	Catalog Number
120	13.1 (4.0)	117 (385)	123 (405)	—	—	—	—	—	—	—	NC4
208	39.4 (12.0)	—	—	—	64 (210)	87 (285)	123 (405)	—	—	—	
120	26.2 (8.0)	56 (185)	78 (255)	86.9 (285)	—	—	—	—	—	—	NC8
120	4.92 (1.5)	203 (665)	—	—	—	—	—	—	—	—	NC26
208	14.8 (4.5)	—	—	—	180 (590)	87 (285)	—	—	—	—	
220	16.4 (5.0)	—	—	—	52 (555)	81 (265)	—	—	—	—	
240	19.7 (6.0)	—	—	—	—	—	—	152 (500)	203 (665)	—	
277	26.2 (8.0)	—	—	—	—	—	—	131 (430)	180 (590)	203 (665)	
120	8.2 (2.5)	157 (515)	—	—	—	—	—	—	—	—	NC210
208	24.6 (7.5)	—	—	—	104 (340)	143 (470)	157 (515)	—	—	—	
220	27.9 (8.5)	—	—	—	98 (320)	136 (445)	157 (515)	—	—	—	
240	32.8 (10.0)	—	—	—	—	—	—	90 (295)	122 (400)	157 (515)	
120	9.8 (3.0)	143 (470)	—	—	—	—	—	—	—	—	NC212
208	29.5 (9.0)	—	—	—	87 (285)	119 (390)	143 (470)	—	—	—	
220	32.8 (10.0)	—	—	—	81 (265)	111 (365)	143 (470)	—	—	—	
240	39.4 (12.0)	—	—	—	—	—	—	75 (245)	101 (330)	143 (470)	

NOTES:

1. *Circuit breakers are sized per article NFPA 70, National Electrical Code..*
2. *When using 2 or more heater cables of different wattage ratings in parallel on a single circuit breaker, use the 15A column amperage of 15 amps, divide it by the maximum footage to arrive at an amps/foot figure for each cable. You can then calculate circuit breaker sizes for these combination loads. These amps/foot factors include the NEC sizing factor in Article 427-4.*
3. *Heater cables with CB optional constructions contain a metal ground shield as required by Article 427-23 of the NEC.*
4. *Article 427-22 of the NEC requires ground fault equipment protection for each branch circuit supplying electric heating equipment. Exceptions to this requirement can be found in NFPA 70, National Electrical Code.*

© March 2019

NC Constant Wattage Heater Cable

FM:
Class I, Division 2, Groups B, C, D
Class II, Division 2, Groups F, G
Class III, Division 2

Maximum Allowable Wattage Based on Maintenance Temperature

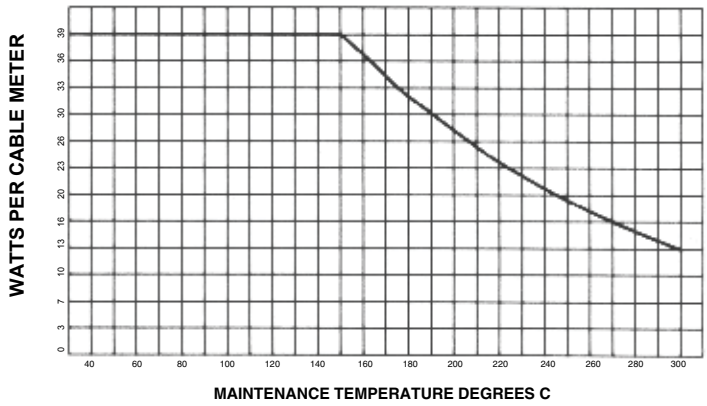

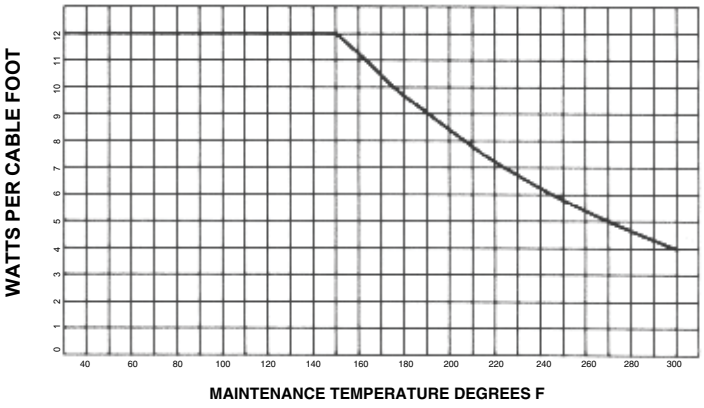

© March 2019

Mineral Insulated Cable

UL:	CSA:	FM:	ATEX/IECEx:
Class I, Division 1 and 2, Groups B, C, D Class II, Division 1 and 2, Groups E, F, G Class III, Division 1 and 2	*Class I, Division 1 and 2, Groups B, C, D Class II, Division 1 and 2, Groups E, F, G Class III, Division 1 and 2 Class I, Zone 1 and 2 Zone 1, Ex de IIB + H_2 T1-T6*	*Class I, Division 1 and 2, Groups A, B, C, D Class II, Division 1 and 2, Groups E, F, G Class III, Division 1 and 2*	*Ex db 60079-30-1 IIB + H_2 T6 T1 Gb Ex tb 60079-30-1 IIIC T80°C T440 °C Db -55°C ≤ Tamb ≤ +55°C IP67*

Application

- MI Cable is custom designed and fabricated for specific applications.
- Nelson MI Cable is a high performance, industrial grade heat tracing cable used for applications requiring:
  - High Temperature Exposure
  - Immunity to Stress Corrosion
  - High Maintain Temperature
  - Under tank Heating (Cryogenic Tanks)
  - High Power Output
  - Constant Power Output Over Entire Length
  - Rugged Cable Construction Heater Length
  - Extended Heater Life

Features

- Mineral insulated cable is a metal sheathed cable that uses a metallic conductor as the heating element.
- The conductor is electrically insulated from the metal sheath with magnesium oxide (MgO).
- Mineral insulated cable is a series resistance heater that generates heat by passing current through the electrical conductor.
- Power output per unit length of the cable therefore varies with the applied voltage and the resistance of the conductor.
- Mineral Insulated Cables are available with either one or two conductors.
- The one conductor cable is available in the E Form where a cold splice is provided at both cable ends for electrical connection. The two-conductor cable is available in two forms.
- The A Form provides an out-and-back circuit with a single cold splice connection at one end.
- The E Form provides cold splices at both ends of the cable.
- Outer sheath construction is Alloy 825, a high temperature corrosion resistant alloy with superior flexibility. Two cable diameters are available.
  - K cable diameter is 4.76 mm (0.1875 in)
  - B cable diameter is 7.94 mm (0.3125 in)
- A unique manufacturing process provides for a thin wall construction which improves flexibility and ease of installation.
- This process also allows the use of high performance alloy conductors for high temperature applications.

Operating Principle

- The series conductor generates heat when voltage is applied as a result of current passing through the conductor.
- Power output per unit length varies with the applied voltage and circuit resistance.
- The circuit resistance, in turn, varies with cable length.
- MI cables are available with a wide selection of conductor resistances.
- Based on voltage and desired cable length, a specific conductor is selected with a cable resistance that provides the desired power output.

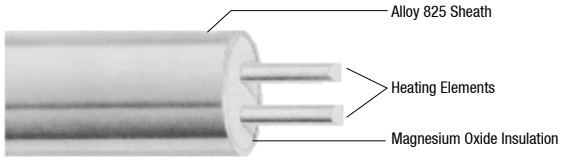

Options

- Pulling Eye for A Form only. Add prefix - **P** to catalog number.
- Oversize cold sections or special feature requirement. Add prefix - **X** to catalog number.
  - "K" Single Conductor 40A Standard, 55A Oversized
  - "K" Two Conductor 25A Standard, 40A Oversized
  - "B" Two Conductor 25A Standard, 40A Oversized
- Mounting of hot-cold junction outside thermal insulation (freeze protection of lines over +316°C (+600°F). Add suffix - **EM** to catalog number.
- Factory mounting of QHT-3 Adapter (sheath temperature over 600°F (316°C) and cable wattage above 20 w/ft (66 w/m). Add suffix - **QT** to catalog number.
- UL Listing tag ①. Add suffix -**UG** to catalog number.
- UL Hazardous Area Listing tag ①. Add suffix - **UH** to catalog number.
- UL Snow Melting Listing tag ①. Add suffix -**UM** to catalog number.
- FM Hazardous Area Listing tag ①. Add suffix - **FH** to catalog number.
- CSA Hazardous Area Listing tag ①. Add suffix - **CH** to catalog number.
- ATEX/IECEx Haxardous Area Listing tag ①. Add suffix **-EEX** to catalog number.
- QHT-3 HIGH TEMPERATURE ADAPTER is used to heat sink the hot section transition as it passes through the thermal insulation when the hot to cold connection must be located outside the thermal insulation due to sheath temperatures over +316°C (+600°F) and cable Wattage exceeds 66 w/m (20 w/ft).

Certifications and Compliances

- UL Listed: E33597, E53501, E49805
- CSA Standard: C22.2 No. 130-16
- CSA Certified: LR42103, LR42104
- FM Approved: JI 3D0A5.AX, JI 1M1A4.AF, JI 1X6A9.AX
- Other Standards: IEEE 515-2011, IEEE 515.1-2012

① *Requires volts, amps, watts and calculated sheath temperature with each cable order*

Note:
Cable voltage,amps and watts must be provided for approval tags. Calculated sheath temperature must also be provided for hazardous (classified) approval tags.

© March 2019

Mineral Insulated Cable

UL:	CSA:	FM:	ATEX/IECEx:
Class I, Division 1 and 2, Groups B, C, D *Class II, Division 1 and 2, Groups E, F, G* *Class III, Division 1 and 2*	*Class I, Division 1 and 2, Groups B, C, D* *Class II, Division 1 and 2, Groups E, F, G* *Class III, Division 1 and 2* *Class I, Zone 1 and 2* *Zone 1, Ex de IIB + H_2 T1-T6*	*Class I, Division 1 and 2, Groups A, B, C, D* *Class II, Division 1 and 2, Groups E, F, G* *Class III, Division 1 and 2*	*Ex db 60079-30-1 IIB + H_2 T6 T1 Gb* *Ex tb 60079-30-1 IIIC T80 °C T440 °C Db* *-55°C ≤ Tamb ≤ +55°C IP67*

Cable Ratings

Sheath Material	Cable Diameter in Millimeters (Inches)	Number of Conductors	Maximum Voltage	Maximum Exposure °C (°F)	Maximum Power Watts/m (Watts/ft)	Weight kg/m (Lbs/Ft)	Standard Cold Lead m (ft)	Forms	Cable Type
Alloy 825	4.76 (0.19)	1	600	593 (1100)	204 (62.0)	0.10 (0.07)	2.1 (7.0)	E	K1
	4.76 (0.19)	2	300		204 (62.0)	0.10 (0.07)		A and E	K2
	7.94 (0.31)	2	600		289 (88.0)	0.33 (0.22)		A and E	B2

MI Cables

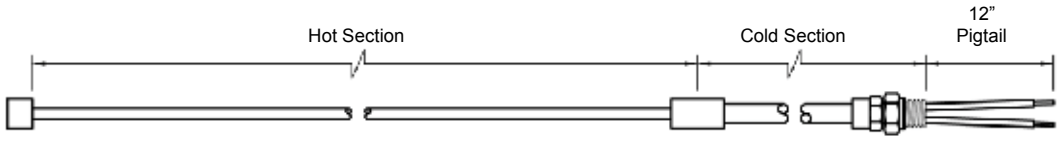

Form A (2 Conductor)

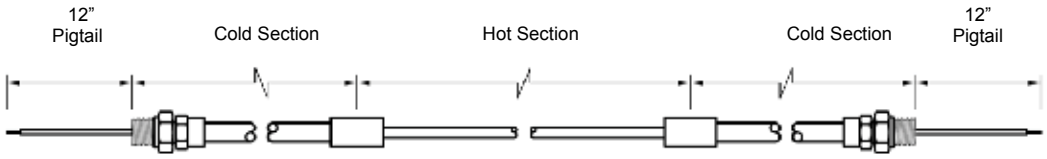

Form E (1 Conductor)

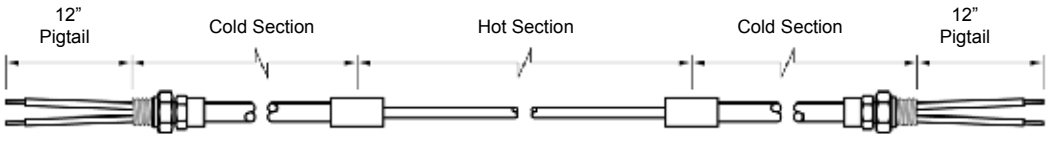

Form E (2 Conductor)

© March 2019

UL:	CSA:	FM:	ATEX/IECEx:
Class I, Division 1 and 2, Groups B, C, D Class II, Division 1 and 2, Groups E, F, G Class III, Division 1 and 2	*Class I, Division 1 and 2, Groups B, C, D Class II, Division 1 and 2, Groups E, F, G Class III, Division 1 and 2 Class I, Zone 1 and 2 Zone 1, Ex de IIB + H_2 T1-T6*	*Class I, Division 1 and 2, Groups A, B, C, D Class II, Division 1 and 2, Groups E, F, G Class III, Division 1 and 2*	*Ex db 60079-30-1 IIB + H_2 T6 T1 Gb Ex tb 60079-30-1 IIIC T80 °C T440 °C Db -55°C ≤ Tamb ≤ +55°C IP67*

Catalog Numbering Guide

(*)	A	670B	150	07	(*)
Optional Construction Prefix P - Pulling Eye for A Form only X - Oversize cold sections or special feature requirement	Form A or E ①	Conductor selection from table	Hot Section Length order in Feet	Cold section Length(s) order in Feet	Optional Construction Suffix EM - Mounting of hot-cold junction outside thermal insulation (freeze protection of lines over 316°C (600°F) QT - Factory mounting of QHT-3 Adapter (sheath temperature over 316°C (600°F) and cable wattage above 66 w/m (20 w/ft) UG - UL Listing tag ② UH - UL Hazardous Area Listing tag ② UM - UL Snow Melting Listing tag ② FH - FM Hazardous Area Listing tag ② CH - CSA Hazardous Area Listing tag ② EEX - ATEX/IECEx Hazardous Area Listing tag ②

① When E Form cold sections are specified, both cold section lengths must be provided for proper cable construction. Example: E 279K 500 0707 for 2.1 m (7 ft) cold sections on both cable ends.

② Requires volts, amps, watts and calculated sheath temperature with each cable order

© March 2019

UL:	CSA:	FM:	ATEX/IECEx:
Class I, Division 1 and 2, Groups B, C, D *Class II, Division 1 and 2, Groups E, F, G* *Class III, Division 1 and 2*	*Class I, Division 1 and 2, Groups B, C, D* *Class II, Division 1 and 2, Groups E, F, G* *Class III, Division 1 and 2* *Class I, Zone 1 and 2* *Zone 1, Ex de IIB + H_2 T1-T6*	*Class I, Division 1 and 2, Groups A, B, C, D* *Class II, Division 1 and 2, Groups E, F, G* *Class III, Division 1 and 2*	*Ex db 60079-30-1 IIB + H_2 T6 T1 Gb* *Ex tb 60079-30-1 IIIC T80 °C T440 °C Db* *-55°C ≤ Tamb ≤ +55°C IP67*

Custom Cable Resistance Characteristics

2–Conductor Cable, 4.76 mm (0.19 in) Diameter Alloy 825, 300 Volts				
	Cable Resistance at 20ºC (68ºF)		Maximum Exposure Temperature Rating	
Cable Number	Ohms/Meter	Ohms/Foot	°C (°F)	Resistance Curve
556K	0.1411	0.0430	316 (600)	1
658K	0.1906	0.0581		1
674K	0.2434	0.0742		1
693K	0.3038	0.0926		1
712K	0.3839	0.1170		1
715K	0.4823	0.1470		1
721K	0.6988	0.2130		3
722K	0.6988	0.2130		1
732K	1.0466	0.3190	593 (1100)	N/A
742K	1.3648	0.4160		
752K	1.7060	0.5200		
766K	2.1654	0.6600		
774K	2.4278	0.7400		
810K	3.2808	1.0000		
813K	4.2651	1.3000		
818K	5.9055	1.8000		
824K	7.6772	2.3400		
830K	9.7113	2.9600		
838K	12.1391	3.7000		
846K	15.4856	4.7200		
860K	18.3727	5.6000		
866K	21.6535	6.6000		
894K	29.5276	9.0000		
919K	59.0551	18.0000		

© March 2019

UL:	CSA:	FM:	ATEX/IECEx:
Class I, Division 1 and 2, Groups B, C, D Class II, Division 1 and 2, Groups E, F, G Class III, Division 1 and 2	*Class I, Division 1 and 2, Groups B, C, D Class II, Division 1 and 2, Groups E, F, G Class III, Division 1 and 2 Class I, Zone 1 and 2 Zone 1, Ex de IIB + H_2 T1-T6*	*Class I, Division 1 and 2, Groups A, B, C, D Class II, Division 1 and 2, Groups E, F, G Class III, Division 1 and 2*	*Ex db 60079-30-1 IIB + H_2 T6 T1 Gb Ex tb 60079-30-1 IIIC T80 °C T440 °C Db -55°C ≤ Tamb ≤ +55°C IP67*

Custom Cable Resistance Characteristics

2–Conductor Cable, 4.76 mm (0.19 in) Diameter Alloy 825, 600 Volts				
	Cable Resistance at 20ºC (68ºF)		Maximum Exposure Temperature Rating	
Cable Number	Ohms/Meter	Ohms/Foot	°C (°F)	Resistance Curve
588B	0.0233	0.0071	316 (600)	1
614B	0.0489	0.0149		1
627B	0.0886	0.0270		2
640B	0.1312	0.0400		3
670B	0.2133	0.0650	593 (1100)	N/A
710B	0.3412	0.1040		
715B	0.5315	0.1620		
720B	0.6726	0.2050		
732B	1.0663	0.3250		
750B	1.6404	0.5000		
774B	2.4114	0.7350		
810B	3.8123	1.1620		
819B	6.1352	1.8700		
830B	9.7441	2.9700		
840B	14.1076	4.3000		
859B	19.6194	5.9800		

© March 2019

UL:	CSA:	FM:	ATEX/IECEx:
Class I, Division 1 and 2, Groups B, C, D *Class II, Division 1 and 2, Groups E, F, G* *Class III, Division 1 and 2*	*Class I, Division 1 and 2, Groups B, C, D* *Class II, Division 1 and 2, Groups E, F, G* *Class III, Division 1 and 2* *Class I, Zone 1 and 2* *Zone 1, Ex de IIB + H_2 T1-T6*	*Class I, Division 1 and 2, Groups A, B, C, D* *Class II, Division 1 and 2, Groups E, F, G* *Class III, Division 1 and 2*	*Ex db 60079-30-1 IIB + H_2 T6 T1 Gb* *Ex tb 60079-30-1 IIIC T80 °C T440 °C Db* *-55°C ≤ Tamb ≤ +55°C IP67*

Custom Cable Resistance Characteristics

1–Conductor Cable, 4.76 mm (0.19 in) Diameter Alloy 825, 600 Volts				
	Cable Resistance at 20ºC (68ºF)		Maximum Exposure Temperature Rating	
Cable Number	Ohms/Meter	Ohms/Foot	°C (°F)	Resistance Curve
145K	0.0151	0.0046	316 (600)	1
189K	0.0295	0.0090		1
216K	0.0541	0.0165		2
239K	0.1280	0.0390	593 (1100)	N/A
250K	0.1640	0.0500		
279K	0.2592	0.0790		
310K	0.3117	0.0950		
316K	0.5151	0.1570		
326K	0.8530	0.2600		
333K	1.0827	0.3300		
346K	1.4993	0.4570		
372K	2.3950	0.7300		
412K	3.8386	1.1700		
415K	4.8556	1.4800		
423K	7.7428	2.3600		
430K	9.1864	2.8000		
447K	14.7638	4.5000		

Cable Resistance vs Temperature Multiplier

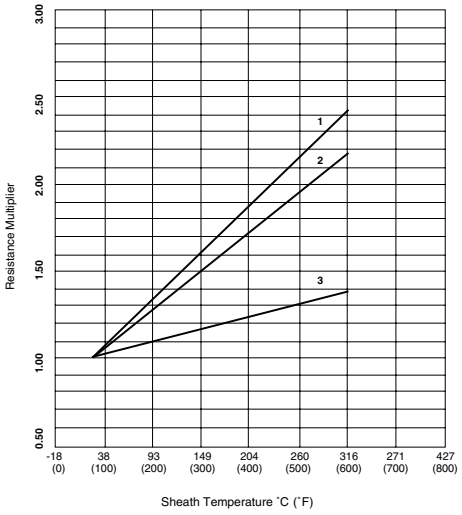

Note: Factory design required for the following applications:
1. Exposure temperature greater than 593°C (1100°F).
2. Maintain temperature greater than (204°C) (400°F).

© March 2019

UL:	CSA:	FM:	ATEX/IECEx:
Class I, Division 1 and 2, Groups B, C, D Class II, Division 1 and 2, Groups E, F, G Class III, Division 1 and 2	*Class I, Division 1 and 2, Groups B, C, D Class II, Division 1 and 2, Groups E, F, G Class III, Division 1 and 2 Class I, Zone 1 and 2 Zone 1, Ex de IIB + H_2 T1-T6*	*Class I, Division 1 and 2, Groups A, B, C, D Class II, Division 1 and 2, Groups E, F, G Class III, Division 1 and 2*	*Ex db 60079-30-1 IIB + H_2 T6 T1 Gb Ex tb 60079-30-1 IIIC T80 °C T440 °C Db -55°C ≤ Tamb ≤ +55°C IP67*

Maximum Wattages – All Cables
With Hot / Cold Junction Under Thermal Insulation

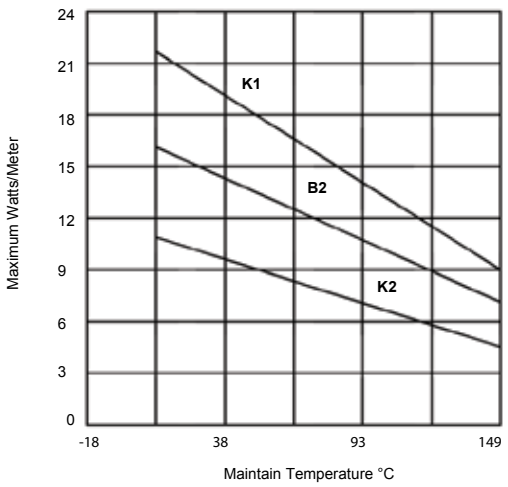

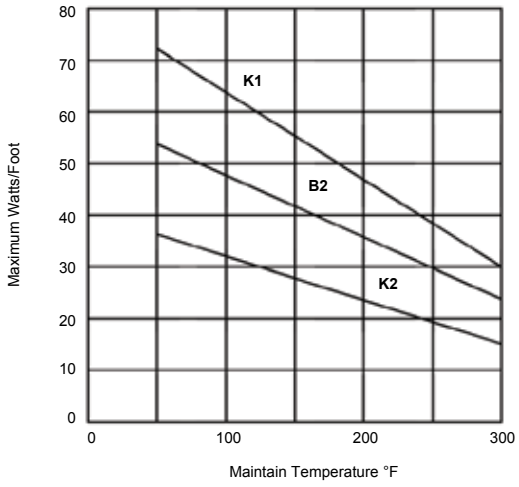

Maximum Wattages – All Cables
With Hot / Cold Junction Outside Thermal Insulation

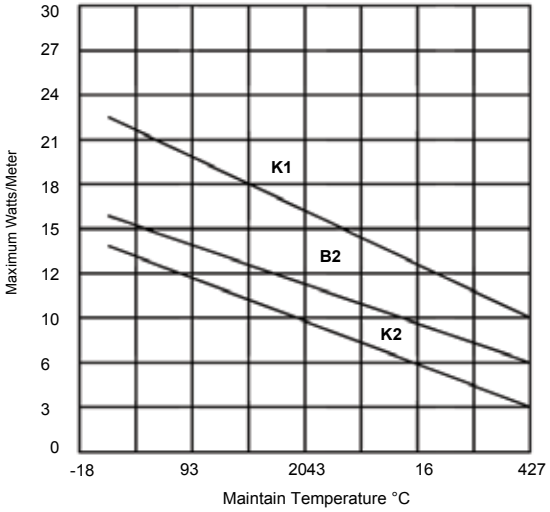

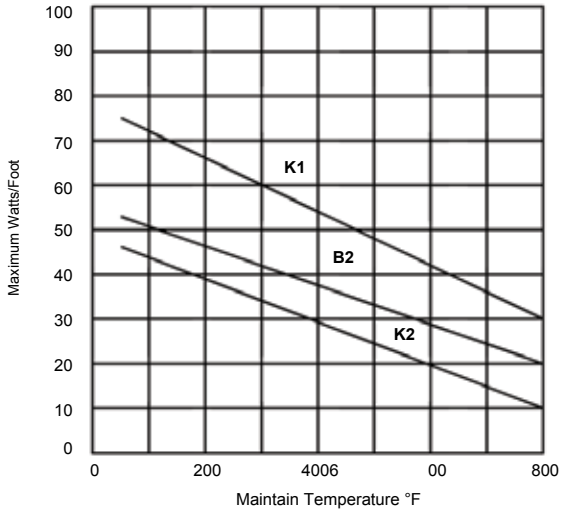

© March 2019

Accessories for Factory Fabricated Heater Cables

UL:
Rated for Hazardous (Classified) Locations

CSA:
Rated for Hazardous (Classified) Locations

ATEX:
Rated for Hazardous (Classified) Locations

General Accessories for use with Nelson Mineral Insulated Heater.

High Temperature Adapter

- QHT-3
  - High Temperature Adapter, used to heat sink the hot to cold connection as it passes through the insulation when the connection must be located outside the insulation.

Pipe Straps

- HPS-6 (0.0" TO 6.0" O.D. Pipe)
- HPS-12 (6.5" TO 12.0" O.D. Pipe)
- HPS-16 (12.5" TO 16.0" O.D. Pipe)
  - Stainless Steel Banding Strap, 0.38" wide with End Termination. Used for strapping mineral insulated cables to pipe.

Clip Strips

- HCS-3 (3.0" Spacing)
- HCS-4 (4.0" Spacing)
  - Steel Clip Strips, 10.0' long. Used to hold mineral insulated cable to tank or vessel wall or to provide uniform spacing in floor warming and snow melt applications.

Junction Boxes

- JBA (with (3) 0.75" NPT Conduit Entries)
  - Cast Aluminum Junction Box, NEMA 4, 7 used for terminating mineral insulated cables. Suitable for use in hazardous locations.

Tie Wire

- SS-05 (160 Yards)
  - Stainless Steel Tie wire, 16-gauge. Used to attach mineral insulated cables to pipes. Suitable for use in corrosive environments.

Warning Sign

- WS-100
  - Weatherproof Warning Sign. Used for cautioning maintenance personnel of the presence of electric heat tracing cable under the insulation. Attached to the outside of pipe insulation in frequent intervals. Black Lettering with Yellow background.

Tape

- AT-50 (50 Yards)
  - Aluminum Foil Tape, 2.0" wide. Used to heat sink (lower the sheath temperature of) heater cable or to attach thermostat sensing bulbs to pipes.

Repair Kits for use with Nelson Mineral Insulated Heater Cables.

Splice Kits

- SI-AA (B Cable to B Cable)
- SI-BB (K Cable to K Cable)
- SI-BA (K Cable to B Cable)
  - Splice Kit. Used for splicing mineral insulated cables in the field. (2 splices per kit).

End Cap Kits

- EI-A (B Cable)
- EI-B (K Cable)
  - End Cap Kit. Used for terminating mineral insulated cables in the field. (2 end caps per kit).

Pulling Eye Kits

- PI-A (B Cable)
- PI-B (K Cable)
  - Pulling Eye Kit. Used for terminating mineral insulated cables when pulling through conduit. (2 pulling eyes per kit).

© March 2019

Thermostats Selection Guide

Ordinary (Unclassified) Area

Temperature Range ° C (° F)	Primary Uses	Features	Maximum Bulb Temp. ° C (° F)
4.4 (40)	Economical pipe sensing temperature control.	Fixed adjustment NEMA 4X, IP66 corrosion resistant, watertight, non-metallic enclosure	71 (160)
-4-163 (25-325)	Corrosive pipe sensing applications for freeze protection and process maintenance piping.	Internal adjustment NEMA 4X, IP66 epoxy coated metal enclosure Ambient compensated	215 (420)
-4-163 (25-325)	Corrosive pipe sensing applications for freeze protection and process maintenance piping. Designed to break both legs of a phase-to-phase heating circuit. Relay coil is powered by heater supply voltage.	Internal adjustment NEMA 4X, IP66 epoxy coated metal enclosure Ambient compensated	215 (420)
160-315 (320-600)	Corrosive pipe sensing applications for freeze protection and process maintenance piping.	Internal adjustment NEMA 4X, IP66 epoxy coated metal enclosure Ambient compensated	340 (650)
0-538 (32-1000)	Use for high temperature piping on freeze protection and process maintenance applications. Use when probe length exceeds 10 ft. - probe can be remote mounted with additional wiring to control unit - such as elevated piping where ground level control is desired.	Internal adjustment NEMA 4X, IP66 corrosion resistant, watertight, non-metallic enclosure Type J thermocouple electronic temperature control Requires 120 Vac control power NEMA 4, IP66 watertight metal enclosure available on special order	593 (1100)
-9-60 (15-140)	Used to turn heat trace system/cables on when ambient temperature goes below freezing. Can be used in ordinary (unclassified) and corrosive environments.	Internal adjustment NEMA 4X, IP66 epoxy coated metal enclosure	71 (160)
N.A.	Contactor for use when current ratings of the above thermostat switches are exceeded - use with thermostat.	50 amp, 600 volt, 3-pole contactor NEMA 4X, IP66 corrosion resistant, watertight, non-metallic enclosure Specify coil voltage Use with thermostat for temperature control NEMA 4 watertight metal enclosure available on special order	N.A.

© March 2019

Thermostats Selection Guide

Switch	Capillary Material	Capillary Length M (Ft)	Approvals/Classifications		Catalog No.
22A/250V SPST Leads	Tin Plated Copper	0.91 (3.0)	UL CSA CE	Ordinary Locations Ordinary Locations Ordinary Locations	**TF4X40**
22A/480V SPDT	Stainless Steel	3.0 (10.0)	UL CSA CE	Ordinary Locations Ordinary Locations Ordinary Locations	**TH4X325**
22A/240V DPST 208-240 Coil Voltage	Stainless Steel	3.0 (10.0)	UL CSA CE	Ordinary Locations Ordinary Locations Ordinary Locations	**TH4X325-2**
22A/480V SPDT Terminals	Stainless Steel	3.7 (12.0)	UL CSA CE	Ordinary Locations Ordinary Locations Ordinary Locations	**TH4X600**
8A/240V SPST Terminals	Alloy 825	3.0 (10.0)	UL FM CSA	Ordinary Locations Ordinary Locations Ordinary Locations	**TE4X60**
22A/480V SPDT Terminals	Stainless Steel	N.A.	UL CSA CE	Ordinary Locations Ordinary Locations Ordinary Locations	**TA4X140**
50A/600V TPST Terminals	N.A.	N.A.	FM CSA	Ordinary Locations Ordinary Locations	**HC4X50**

© March 2019

TF4X40 Thermostat

Ordinary Location Thermostats

UL:
Ordinary (Unclassified) Locations

CSA:
Ordinary (Unclassified) Locations

Applications

- TF4X40 thermostat is used for controlling heat tracing systems in ordinary (unclassified) locations.



Features

- Enclosure: Molded Fiberglass Polyester
- Classifications: NEMA Type 4X IP66
- Temperature Range:
  – Fixed Range: 4.4°C (40°F)
- Exposure: -40°C to 71°C (-40°F to +160°F)
- Capillary Length: 0.9 m (3 ft)
- Material: Tin Plated Copper
- Maximum Bulb Temperature: +71°C (+160°F)
- Electrical Data: CSA Rating
- 22 Amp Resistance 480 Vac: Ul Rating
- Calibration Accuracy: +2.2°C (+4°F)
- Switch Type: Single Pole Single Throw

Certifications and Compliances

- UL Listed: E89748
- CSA Listed: LR52088-4

Dimensions in Millimeters (Inches)

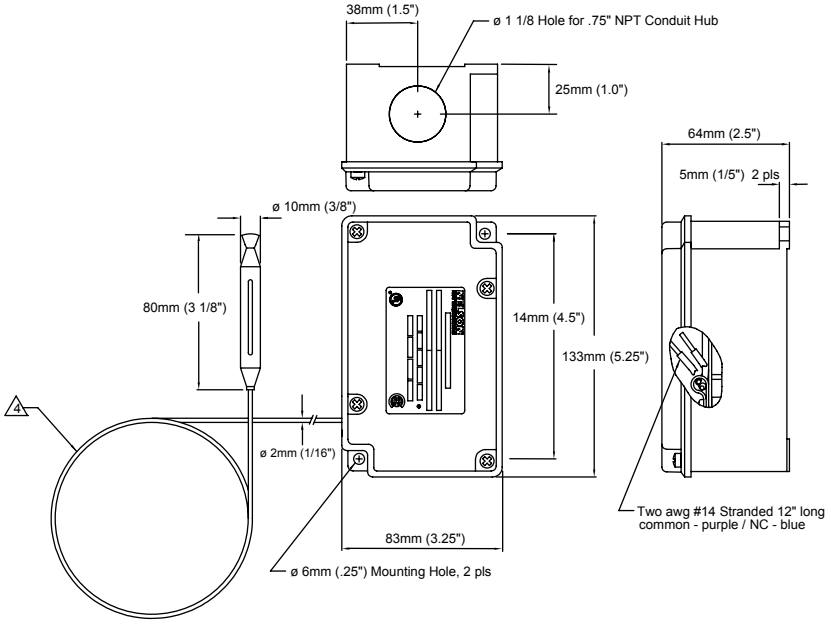

© March 2019

TF4X40 Thermostat

Ordinary Location Thermostats

UL:
Ordinary (Unclassified) Locations

CSA:
Ordinary (Unclassified) Locations

Annual Maintenance

1. Remove cover.
2. Spray a coat of lubricant and rust preventative such as CRC Store and Lube, electrical grade, on the thermostat body.
3. Replace cover.

Installation

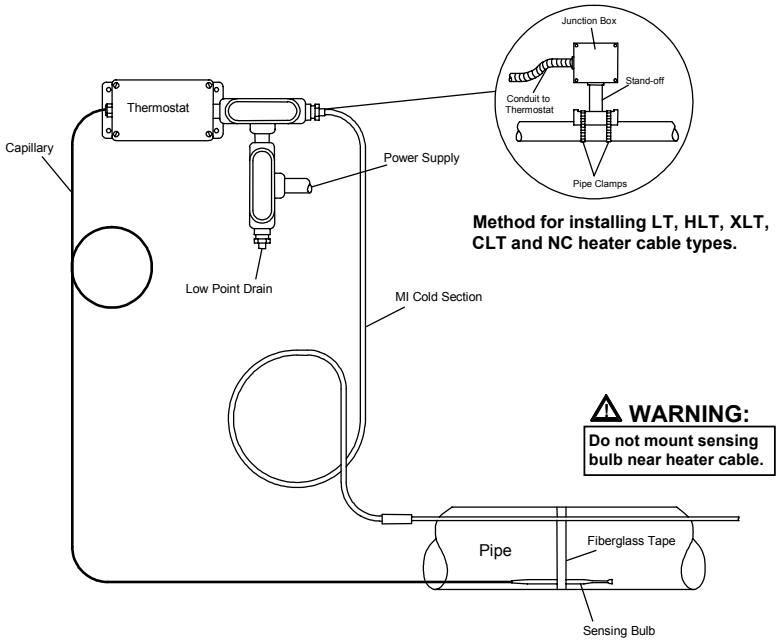

Method for installing LT, HLT, XLT, CLT and NC heater cable types.

Wiring Diagram

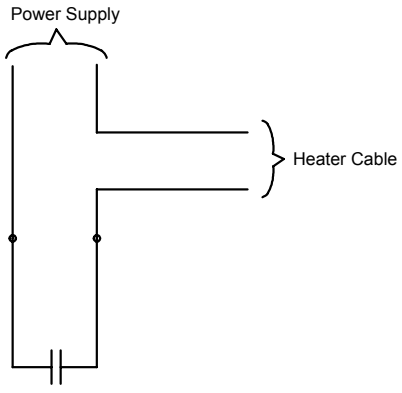

© March 2019

TA4X140 Thermostat

Ordinary Location Thermostat

UL:
Ordinary (Unclassified) Locations

CSA:
Ordinary (Unclassified) Locations

Applications

- TA4X140 is used for ambient temperature control in ordinary (unclassified) or corrosive locations.



Features

- Enclosure: Die Cast Aluminum
- Classifications: NEMA Type 4X IP66
- Temperature Range: -9°C to +60°C (+15°F to +140°F)
- Exposure: -40°C to +71°C (-40 to +160°F)
- Capillary:
  - Length: N/A
  - Material: Stainless Steel
  - Maximum Bulb Temperature: +71°C (+160°F)
- Electrical Data:
  - CSA Rating: 22 amp resistance 480 Vac
  - UL Rating: 22 amp resistance 480 Vac
- Calibration Accuracy: +1.1°C (+2°F)
- Switch Type: Single Pole Double Throw

Certifications and Compliances

- UL Listed: E89748
- CSA Listed: LR701949

Dimensions in Millimeters (Inches)

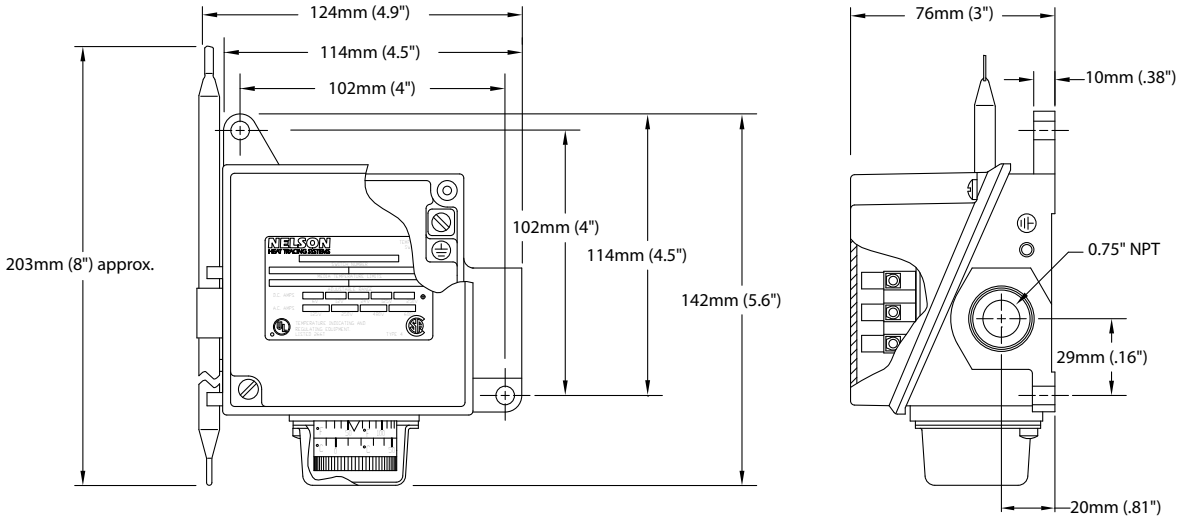

© March 2019

TA4X140 Thermostat

Ordinary Location Thermostat

UL:
Ordinary (Unclassified) Locations

CSA:
Ordinary (Unclassified) Locations

Annual Maintenance

1. Remove Cover.
2. Lubricate dial stem and spray a coat of lubricant and rust preventative such as CRC Store and Lube, electrical grade, on the thermostat body.
3. Replace Cover.

Installation

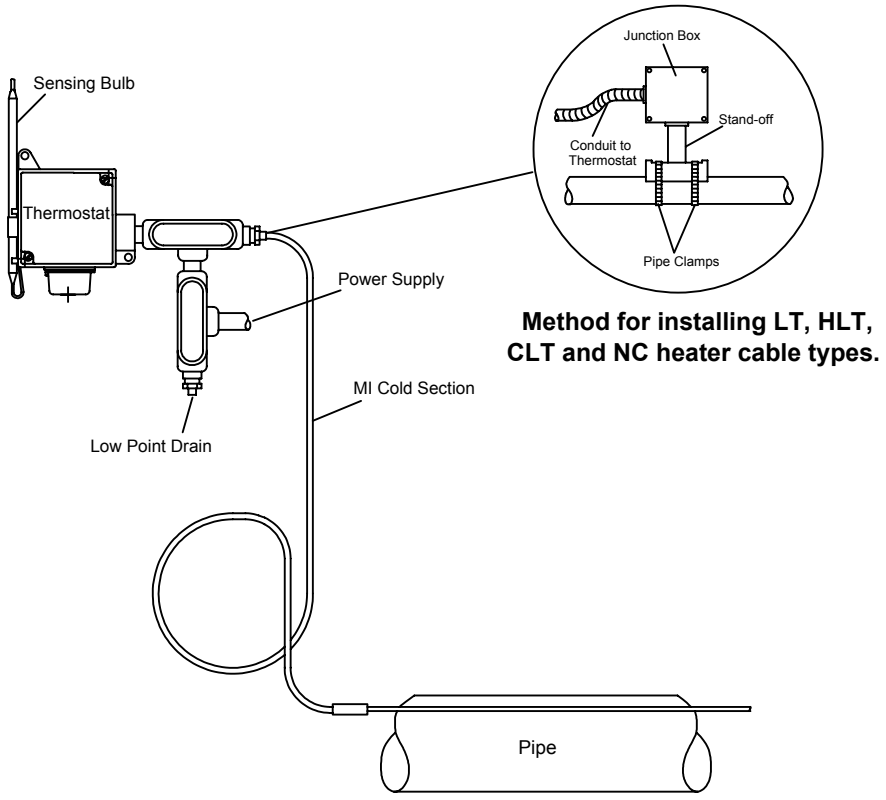

Method for installing LT, HLT, CLT and NC heater cable types.

Wiring Diagram

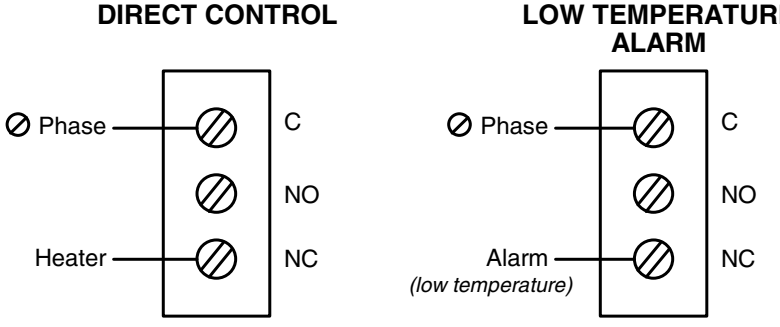

© March 2019

TH4X325 Thermostat

Ordinary Location Thermostat

UL:
Ordinary (Unclassified) Locations

CSA:
Ordinary (Unclassified) Locations

Applications

- TH4X325 thermostat is used for controlling heat tracing systems in an ordinary (unclassified) locations.



Features

- Enclosure: Die Cast Aluminum
- Classifications: NEMA Type 4X IP66
- Temperature Range: -4°C to +163°C (+25°F to +325°F)
- Exposure: -40°C to +71°C (-40°F to +160°F)
- Capillary:
  - Length: 3 m (10 ft)
  - Material: Stainless Steel
  - Maximum Bulb Temperature: +215°C (+420°F)
- Electrical Data:
  - CSA Rating: 22 amp resistance 480 Vac
  - UL Rating: 22 amp resistance 480 Vac
- Calibration Accuracy: +1.6°C (+3°F)
- Switch Type: Single Pole Double Throw

Certifications and Compliances

- UL Listed: E89748
- CSA Listed: LR701949

Dimensions in Millimeters (Inches)

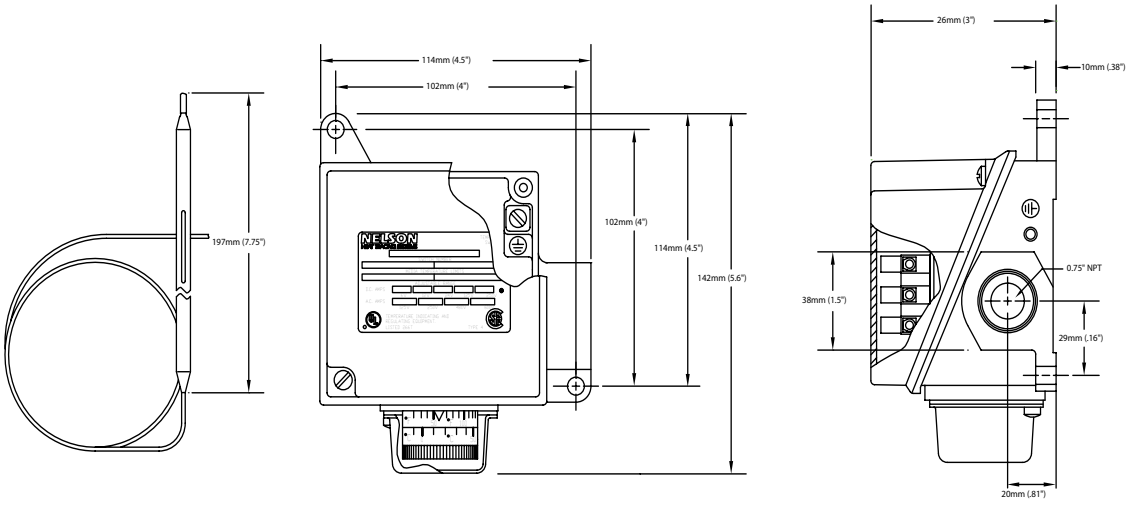

© March 2019

TH4X325 Thermostat

Ordinary Location Thermostat

UL:
Ordinary (Unclassified) Locations

CSA:
Ordinary (Unclassified) Locations

Annual Maintenance

1. Remove cover.
2. Spray a coat of lubricant and rust preventative such as CRC Store and Lube, electrical grade, on the thermostat body.
3. Replace cover.

Installation

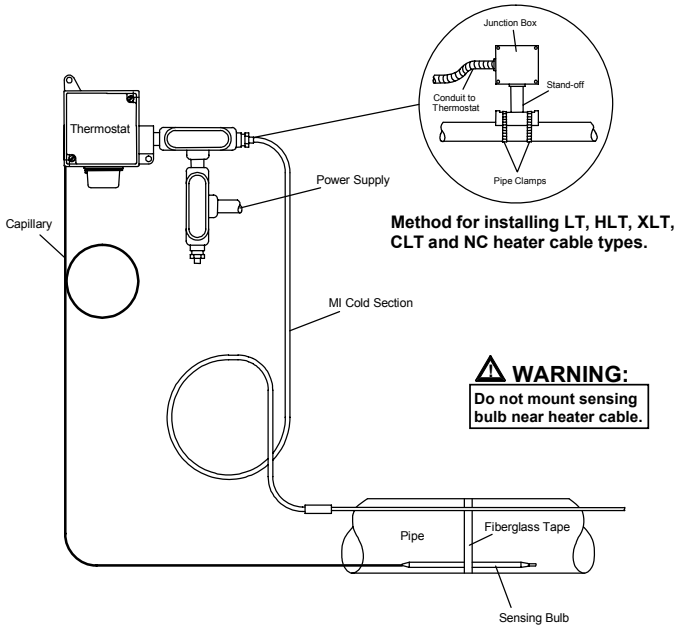

Method for installing LT, HLT, XLT, CLT and NC heater cable types.

Wiring Diagram

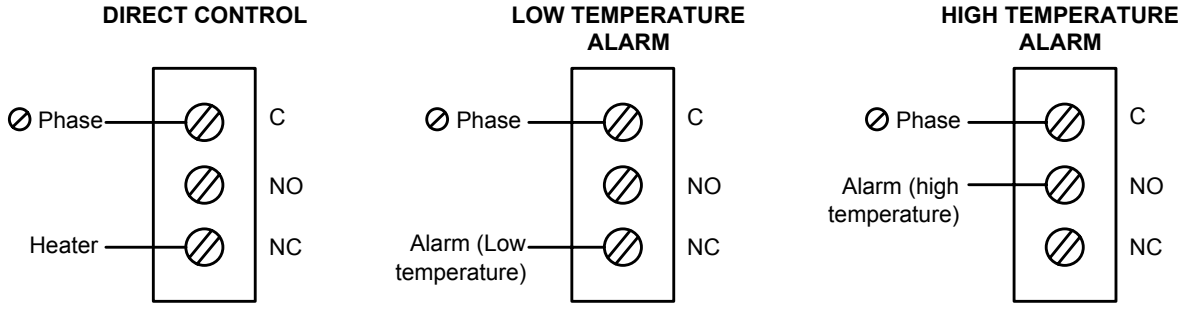

© March 2019

TE4X60 Thermostat

Ordinary Location Thermostat

CSA:
Ordinary (Unclassified) Locations

FM:
Ordinary (Unclassified) Locations

Applications

- TE4X60 thermostat is used for high temperature piping on freeze protection and process maintenance applications in ordinary (unclassified) locations.



Features

- Enclosure: Molded Fiberglass Polyester
- Classifications: NEMA Type 4X IP66
- Temperature Range: 0°C to +538°C (+32°F to +1000°F)
- Capillary:
  - Length: 3m (10ft)
  - Material: Incoloy 825
  - Maximum Bulb Temperature: +593°C (+1100°F)
- Electrical Data:
  - Load Switch: 8 amp resistive @ 240 Vac
  - Control Voltage: 120 Vac
- Calibration Accuracy: ±1% of span
- Switch Type: Single Pole Double Throw

Certifications and Compliances

- CSA Certified: LR53336
- FM Approved: JI 3003367

Dimensions in Millimeters (Inches)

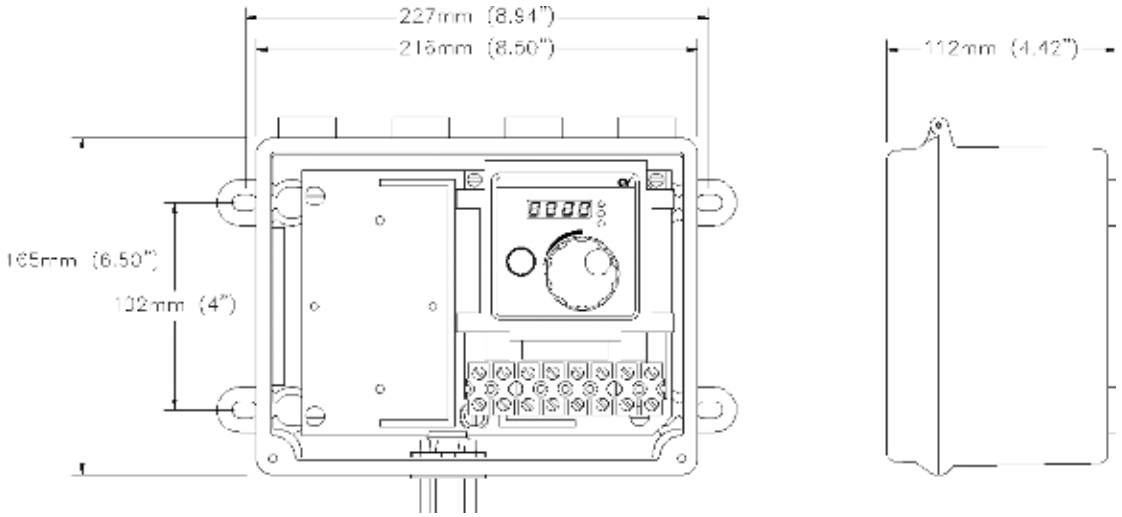

© March 2019

TE4X60 Thermostat

Ordinary Location Thermostat

CSA:
Ordinary (Unclassified) Locations

FM:
Ordinary (Unclassified) Locations

Annual Maintenance
Spray a coat of lubricant and rust preventative such as CRC Store and Lube on the electrical wire connections.

Installation

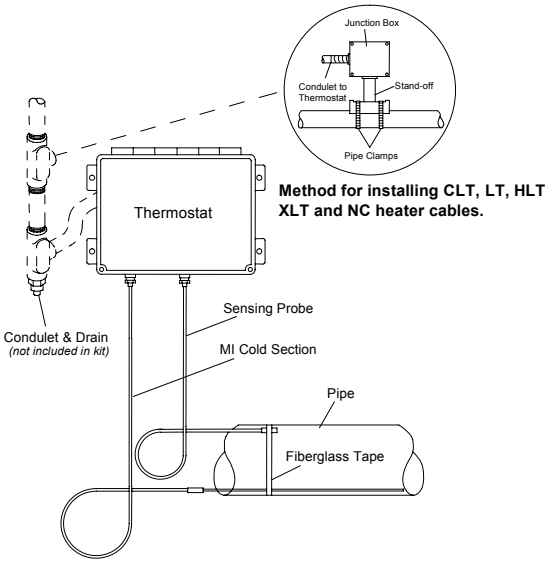

Method for installing CLT, LT, HLT XLT and NC heater cables.

Installation Notes

- Securely mount thermostat enclosure and connect to power wiring.
- Verify thermostat set point is at the desired maintenance temperature.
- Close enclosure cover to prevent damage from inclement weather.
- Insure all fittings associated with the power wiring are installed per applicable codes.
- When conduit type systems are used, low point drains / conduit drains are highly recommended.

Wiring Diagram

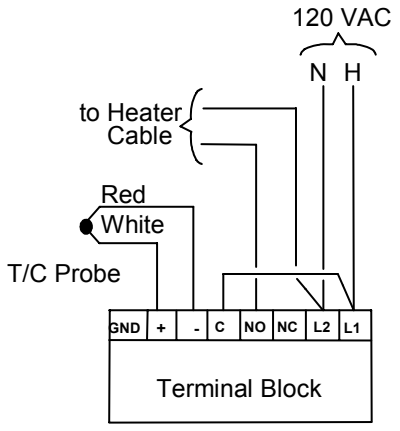

© March 2019

TE4X60–TC Thermostat

Ordinary Location Thermostat

CSA:
Ordinary (Unclassified) Locations

FM:
Ordinary (Unclassified) Locations

Applications

- TE4X60-TC thermostat is used for high temperature piping on freeze protection and process maintenance applications in ordinary (unclassified) locations.
- Includes 3-pole, 50A contactor.



Features

- Enclosure: Molded Fiberglass Polyester
- Classifications: NEMA Type 4X IP66
- Temperature Range: +0 to +538°C (+32 to +1000°F)
- Capillary
  - Length: 3m (10ft)
  - Material: Incoloy 825
  - Maximum Bulb Temperature: +593°C (+1100°F)
- Electrical Data:
  - Load Switch: 50 amp resistive @ 480 Vac
  - Control Voltage: 120 Vac
- Calibration Accuracy: ±1% of span
- Switch Type: Triple Pole Single Throw

Certifications and Compliances

- CSA Certified: LR53336
- FM Approved: JI 3003367

Dimensions in Millimeters (Inches)

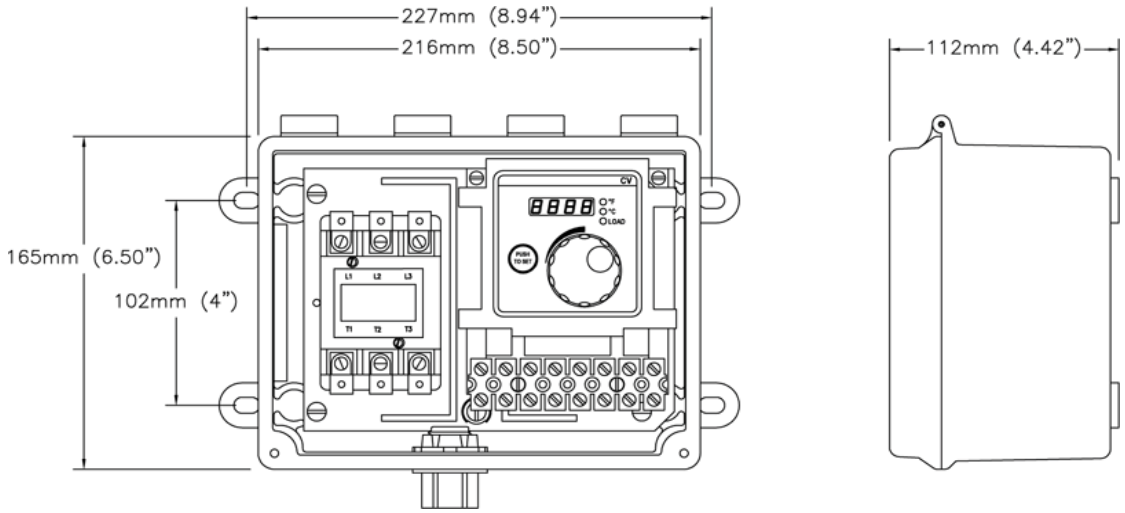

© March 2019

TE4X60–TC Thermostat

Ordinary Location Thermostat

CSA:
Ordinary (Unclassified) Locations

FM:
Ordinary (Unclassified) Locations

Annual Maintenance
Spray a coat of lubricant and rust preventative such as CRC Store and Lube on the electrical wire connections.

Installation

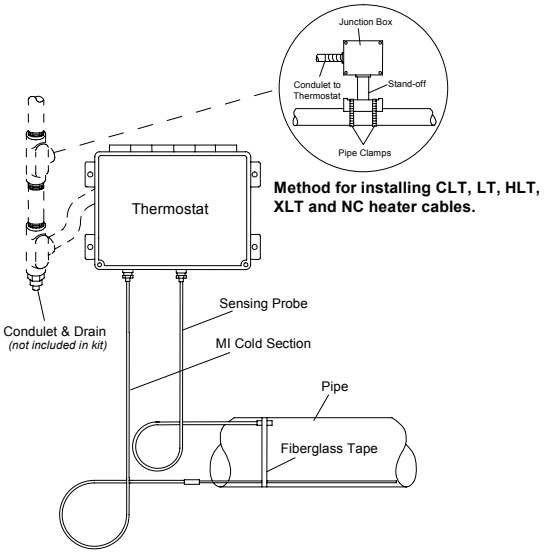

Method for installing CLT, LT, HLT, XLT and NC heater cables.

Installation Notes

- Securely mount thermostat enclosure and connect to power wiring.
- Verify thermostat set point is at the desired maintenance temperature.
- Close enclosure cover to prevent damage from inclement weather.
- Insure all fittings associated with the power wiring are installed per applicable codes.
- When conduit type systems are used, low point drains / conduit drains are highly recommended.

Wiring Diagram

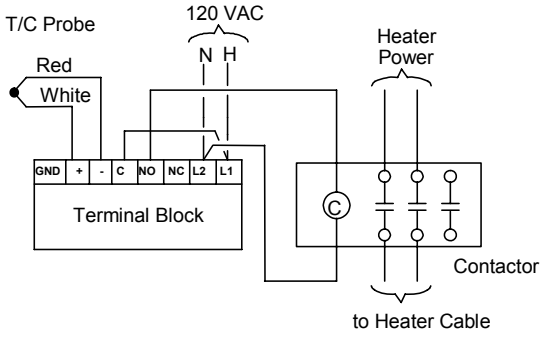

© March 2019

TE460 Thermostat

Ordinary Location Thermostat

CSA:
Ordinary (Unclassified) Locations

FM:
Ordinary (Unclassified) Locations

Applications

- TE460 thermostat is used for high temperature piping on freeze protection and process maintenance applications in ordinary (unclassified) locations.



Features

- Enclosure: Powder Coated Steel
- Classifications: NEMA Type 4X IP66
- Temperature Range: 0°C to +538°C (+32 to +1000°F)
- Capillary:
  - Length 3m (10ft)
  - Material: Incoloy 825
  - Maximum Bulb Temperature: +593°C (+1100°F)
- Electrical Data:
  - Load Switch: 8 amp resistive @ 240 Vac
  - Control Voltage: 120 Vac
- Calibration Accuracy: ±1% of span
- Switch Type: Single Pole Double Throw

Certifications and Compliances

- CSA Certified: LR53336
- FM Approved: JI 3003367

Dimensions in Millimeters (Inches)

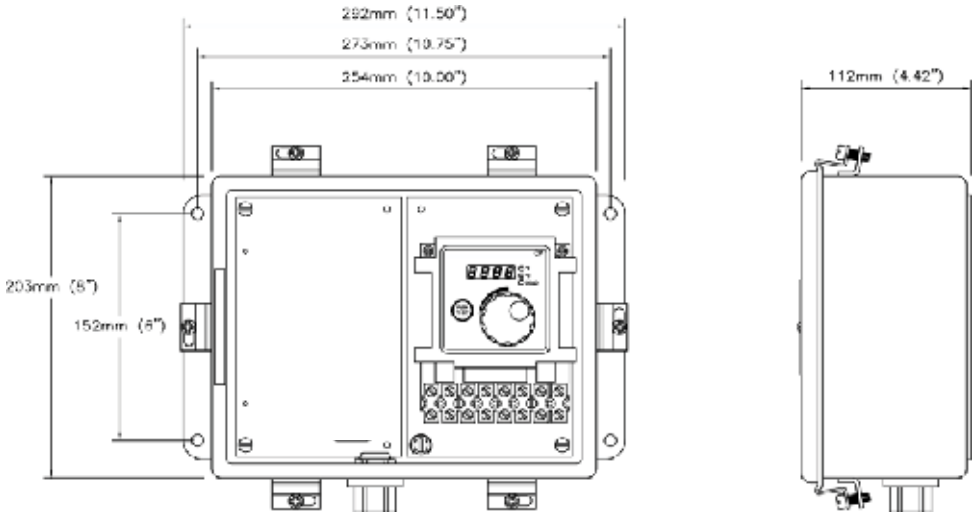

© March 2019

TE460 Thermostat

Ordinary Location Thermostat

CSA:
Ordinary (Unclassified) Locations

FM:
Ordinary (Unclassified) Locations

Annual Maintenance
Spray a coat of lubricant and rust preventative such as CRC Store and Lube on the electrical wire connections.

Installation

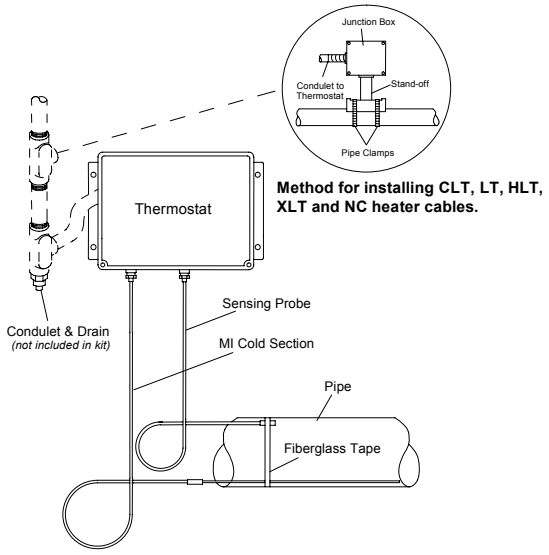

Method for installing CLT, LT, HLT, XLT and NC heater cables.

Installation Notes

- Securely mount thermostat enclosure and connect to power wiring.
- Verify thermostat set point is at the desired maintenance temperature.
- Close enclosure cover to prevent damage from inclement weather.
- Insure all fittings associated with the power wiring are installed per applicable codes.
- When conduit type systems are used, low point drains / conduit drains are highly recommended.

Wiring Diagram

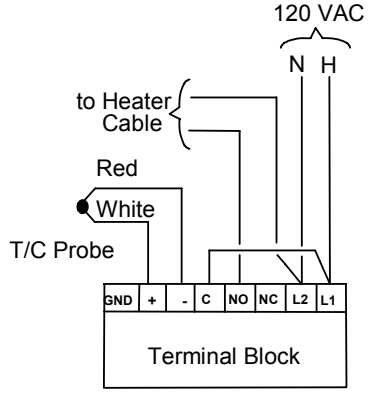

© March 2019

TE460–TC Thermostat

Ordinary Location Thermostat

CSA:
Ordinary (Unclassified) Locations

FM:
Ordinary (Unclassified) Locations

Applications

- TE460-TC thermostat is used for high temperature piping on freeze protection and process maintenance applications in ordinary (unclassified) locations.
- Includes 3-pole, 50A contactor.



Features

- Enclosure: Powder Coated Steel
- Classifications: NEMA Type 4X IP66
- Temperature Range: 0°C to +538°C (+32°F to +1000°F)
- Capillary:
  - Length: 3m (10ft)
  - Material: Incoloy 825
  - Maximum Bulb Temperature: +593°C (+1100°F)
- Electrical Data:
  - Load Switch: 50 amp resistive @ 480 Vac
  - Control Voltage: 120 Vac
- Calibration Accuracy: ±1% of span
- Switch Type: Triple Pole Single Throw

Certifications and Compliances

- CSA Certified: LR53336
- FM Approved: JI 3003367

Dimensions in Millimeters (Inches)

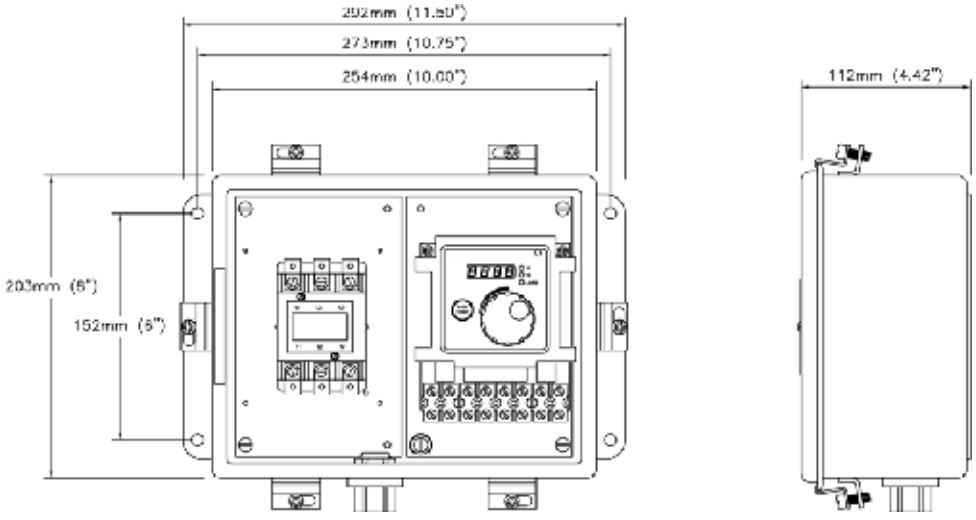

© March 2019

TE460–TC Thermostat

Ordinary Location Thermostat

CSA:
Ordinary (Unclassified) Locations

FM:
Ordinary (Unclassified) Locations

Annual Maintenance
Spray a coat of lubricant and rust preventative such as CRC Store and Lube on the electrical wire connections.

Installation

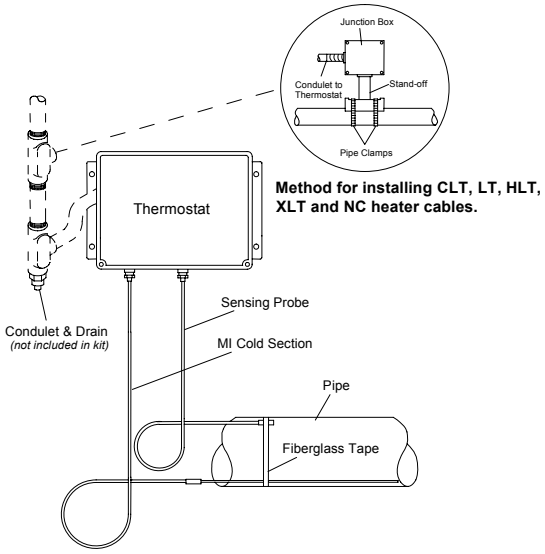

Method for installing CLT, LT, HLT, XLT and NC heater cables.

Installation Notes

- Securely mount thermostat enclosure and connect to power wiring.
- Verify thermostat set point is at the desired maintenance temperature.
- Close enclosure cover to prevent damage from inclement weather.
- Insure all fittings associated with the power wiring are installed per applicable codes.
- When conduit type systems are used, low point drains / conduit drains are highly recommended.

Wiring Diagram

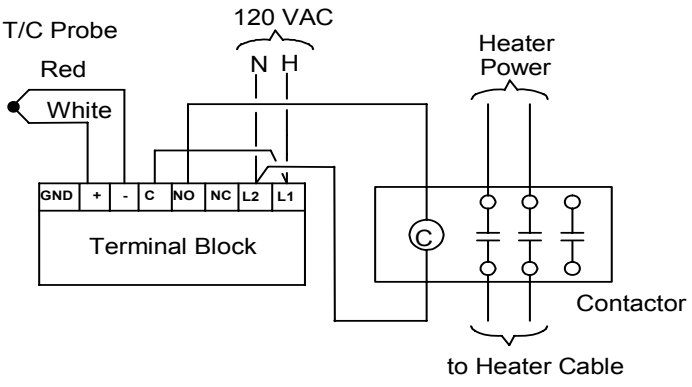

© March 2019

TA7140 Thermostat

Hazardous Location Thermostat

UL:
Class I, Division 1 and 2, Groups B, C, D
Class II, Division 1 and 2, Groups E, F, G

CSA:
Class I, Division 1 and 2, Groups B, C, D
Class II, Division 1 and 2, Groups E, F, G

FM:
Class I, Division 1 and 2, Groups B, C, D
Class II, Division 1 and 2, Groups E, F, G

ATEX:
II 2 G D
EEx d IIC T6
Tamb -40°C to +60°C
IP65

Applications

- TA7140 thermostat is for ambient temperature control in hazardous locations.

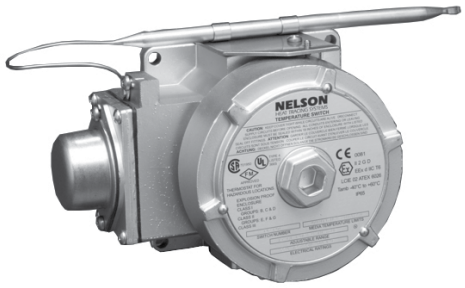

Features

- Enclosure: Cast Aluminum
- Classifications: NEMA Type 4, 7, 9 IP66
- Temperature Range: -9°C to +60°C (+15°F to +140°F)
- Enclosure Limits: -40°C to +60°C (-40°F to +140°F)
- Capillary:
  - Length: N/A
  - Material: Stainless Steel
  - Maximum Bulb Temperature: +71°C (+160°F)
- Electrical Data:
  - CSA Rating: 22 amp resistance 480 Vac
  - UL Rating: 22 amp resistance 480 Vac
- Calibration Accuracy: +1.1°C (+2°F)
- Switch Type: Single Pole Double Throw

Certifications and Compliances

- UL Listed: E58658
- CSA Certified: LR34556
- FM Approved: 1Z1A0.Ae
- LCIE Certified: 04 ATEX 6048

Dimensions in Millimeters (Inches)

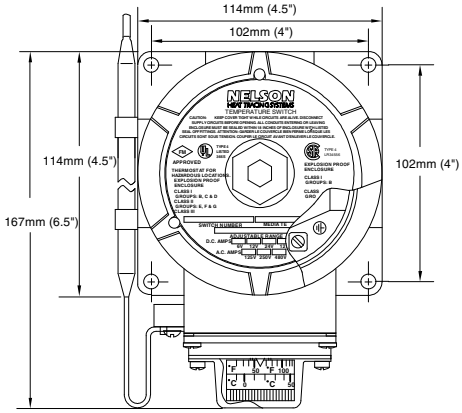

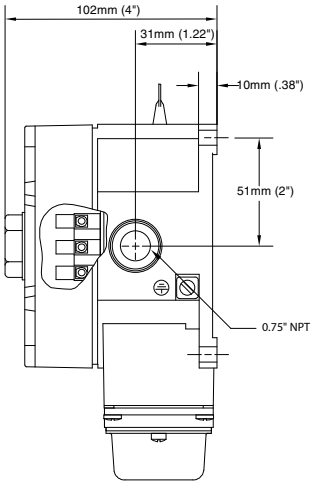

© March 2019

TA7140 Thermostat

Hazardous Location Thermostat

UL:	CSA:	FM:	ATEX:
Class I, Division 1 and 2, Groups B, C, D *Class II, Division 1 and 2, Groups E, F, G*	*Class I, Division 1 and 2, Groups B, C, D* *Class II, Division 1 and 2, Groups E, F, G*	*Class I, Division 1 and 2, Groups B, C, D* *Class II, Division 1 and 2, Groups E, F, G*	*Ⓔx II 2 G D* *EEx d IIC T6* *Tamb -40°C to +60°C* *IP65*

Annual Maintenance

1. Remove knob.
2. Lubricate dial stem and spray a coat of lubricant and rust preventative such as CRC Store and Lube, electrical grade, on the thermostat body.
3. Replace knob.

Installation

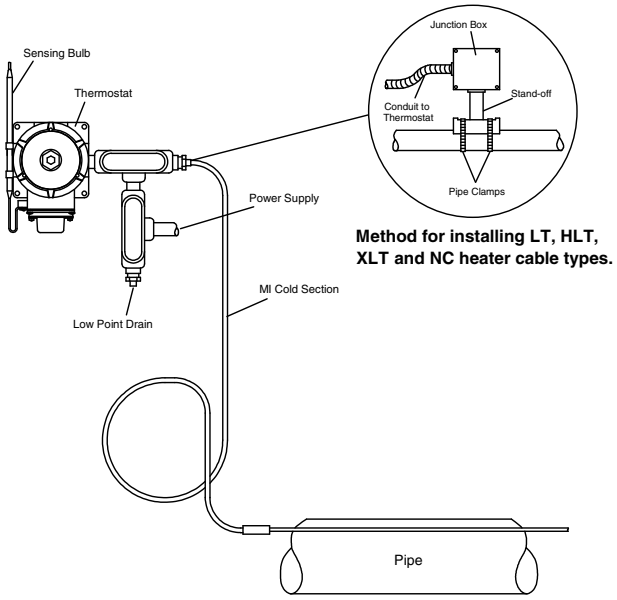

Method for installing LT, HLT, XLT and NC heater cable types.

Wiring Diagram

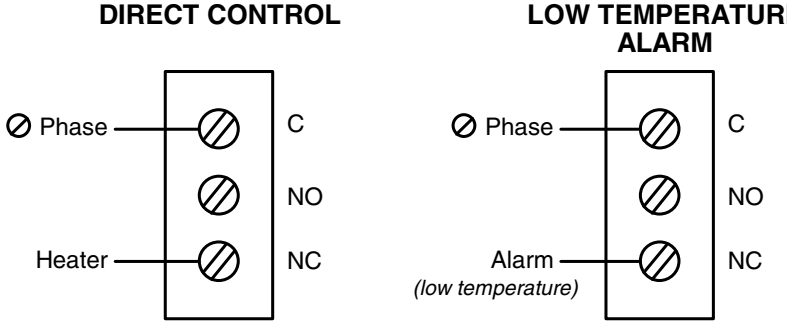

© March 2019

TH7325 Thermostat

Hazardous Location Thermostat

UL:
Class I, Division 1 and 2, Groups B, C, D
Class II, Division 1 and 2, Groups E, F, G

CSA:
Class I, Division 1 and 2, Groups B, C, D
Class II, Division 1 and 2, Groups E, F, G

FM:
Class I, Division 1 and 2, Groups B, C, D
Class II, Division 1 and 2, Groups E, F, G

ATEX:
Ⓔx II 2 G D
EEx d IIC T6
Tamb -40°C to +60°C
IP65

Applications

- TH7325 thermostat is used for controlling heat tracing systems in hazardous locations.
- The capillary bulb should be mounted on the side of the pipe.



Features

- Enclosure: Cast Aluminum
- Classifications: NEMA Type 4, 7, 9 IP66
- Temperature Range: -4°C to +163°C (+25 to +325°F)
- Enclosure Limits:-40°C to +60°C (-40°F to +140°F)
- Capillary:
  - Length: 3m (10ft)
  - Material: Stainless Steel
  - Maximum Bulb Temperature: +215°C (+420°F)
- Electrical Data:
  - CSA Rating: 22 amp resistance 480 Vac
  - UL Rating: 22 amp resistance 480 Vac
- Calibration Accuracy: +1.6°C (+3°F)
- Switch Type: Single Pole Double Throw

Certifications and Compliances

- UL Listed: E53121
- CSA Certified: LR701950
- FM Approved: 1Z1A0.Ae
- LCIE Certified: 07 ATEX 6093X

Dimensions in Millimeters (Inches)

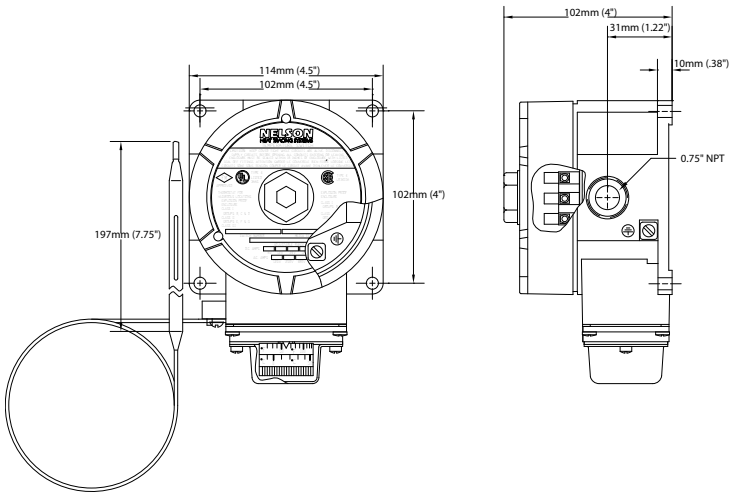

© March 2019

TH7325 Thermostat

Hazardous Location Thermostat

UL:	CSA:	FM:	ATEX:
Class I, Division 1 and 2, Groups B, C, D	*Class I, Division 1 and 2, Groups B, C, D*	*Class I, Division 1 and 2, Groups B, C, D*	*Ⓔx II 2 G D*
Class II, Division 1 and 2, Groups E, F, G	*Class II, Division 1 and 2, Groups E, F, G*	*Class II, Division 1 and 2, Groups E, F, G*	*EEx d IIC T6*
			Tamb -40°C to +60°C
			IP65

Annual Maintenance

1. Remove cover.
2. Spray a coat of lubricant and rust preventative such as CRC Store and Lube, electrical grade, on the thermostat body.
3. Replace cover.

Installation

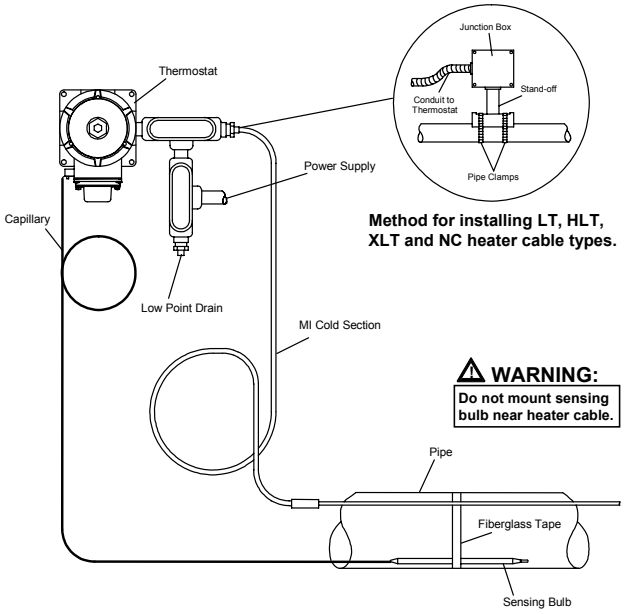

Method for installing LT, HLT, XLT and NC heater cable types.

Wiring Diagram

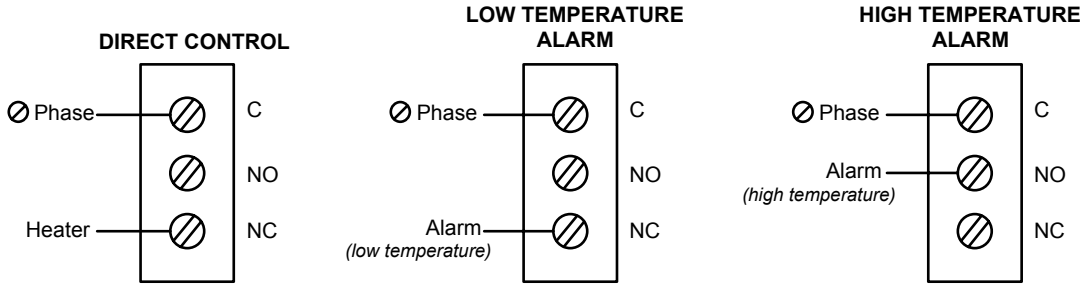

© March 2019

TE760 Thermostat

Hazardous Location Thermostat

CSA:
Class I, Division 1, Groups B, C, D
Class II, Division 1, Groups E, F, G
Class I, Zone 1, Ex d IIB+H_2

FM:
Class I, Division 1, Groups B, C, D
Class II, Division 1, Groups E, F, G
Class I, Zone 1, AEx d IIB+H_2

Applications

- TE760 thermostat is used for high temperature piping on freeze protection and process maintenance applications in hazardous locations.



Features

- Enclosure: Cast Aluminum
- Classifications: NEMA Type 4, 7, 9 IP66
- Temperature Range: 0°C to +538°C (+32 to +1000°F)
- Enclosure Limits: -40°C to +60°C (-40 to +140°F)
- Capillary:
  - Length: 3m (10ft.)
  - Material: Incoloy 825
  - Maximum Bulb Temperature: +593°C (+1100°F)
- Electrical Data:
  - Load Switching: 8 amp resistive @ 240Vac
  - Control Voltage: 120 Vac
- Calibration Accuracy: ±1% of span
- Switch Type: Single Pole Double Throw

Certifications and Compliances

- CSA Certified: LR53336
- FM Approved: JI 3003367

Dimensions in Millimeters (Inches)

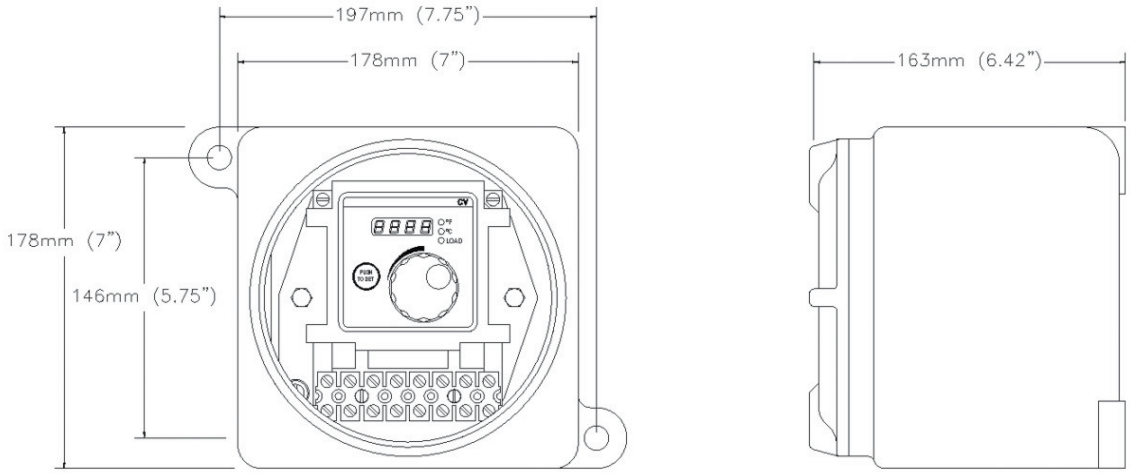

© March 2019

TE760 Thermostat

Hazardous Location Thermostat

CSA:
Class I, Division 1, Groups B, C, D
Class II, Division 1, Groups E, F, G
Class I, Zone 1, Ex d IIB+H_2

FM:
Class I, Division 1, Groups B, C, D
Class II, Division 1, Groups E, F, G
Class I, Zone 1, AEx d IIB+H_2

Annual Maintenance
Spray a coat of lubricant and rust preventative such as CRC Store and Lube on the electrical wire connections.

Installation

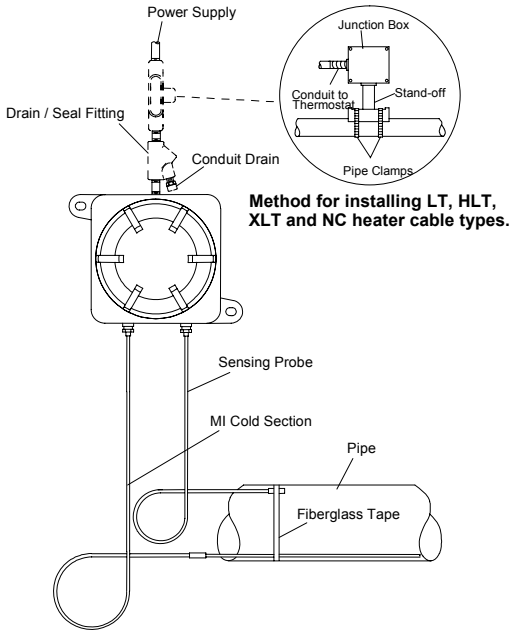

Method for installing LT, HLT, XLT and NC heater cable types.

Installation Notes

- Securely mount thermostat enclosure and connect to power wiring.
- Verify thermostat set point is at the desired maintenance temperature.
- Close enclosure cover to prevent damage from inclement weather.
- Insure all fittings associated with the power wiring are installed per applicable codes.
- When conduit type systems are used, low point drains / conduit drains are highly recommended.

Wiring Diagram

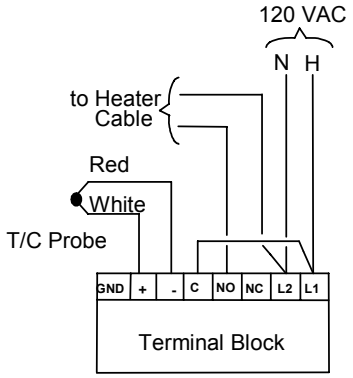

© March 2019

TE760–TC Thermostat

Hazardous Location Thermostat

CSA:
Class I, Division 1, Groups B, C, D
Class II, Division 1, Groups E, F, G
Class I, Zone 1, Ex d IIB+H_2

FM:
Class I, Division 1, Groups B, C, D
Class II, Division 1, Groups E, F, G
Class I, Zone 1, AEx d IIB+H_2

Applications

- These thermostats are used for high temperature piping on freeze protection and process maintenance applications in hazardous locations.
- Includes 3-pole, 50A contactor.



Features

- Enclosure: Cast Aluminum
- Classifications: NEMA Type 4, 7, 9 IP66
- Temperature Range: 0°C to +538°C (+32°F to +1000°F)
- Enclosure Limits: -40°C to +60°C (-40°F to +140°F)
- Capillary:
  - Length: 3m (10ft)
  - Material: Incoloy 825
  - Maximum Bulb Temperature: +593°C (+1100°F)
- Electrical Data:
  - Load Switching: 50 amp resistive @ 480 Vac
  - Control Voltage: 120 Vac
- Calibration Accuracy: ±1% of span
- Switch Type: Triple Pole Single Throw

Certifications and Compliances

- CSA Certified: LR53336
- FM Approved: JI 3003367

Dimensions in Millimeters (Inches)

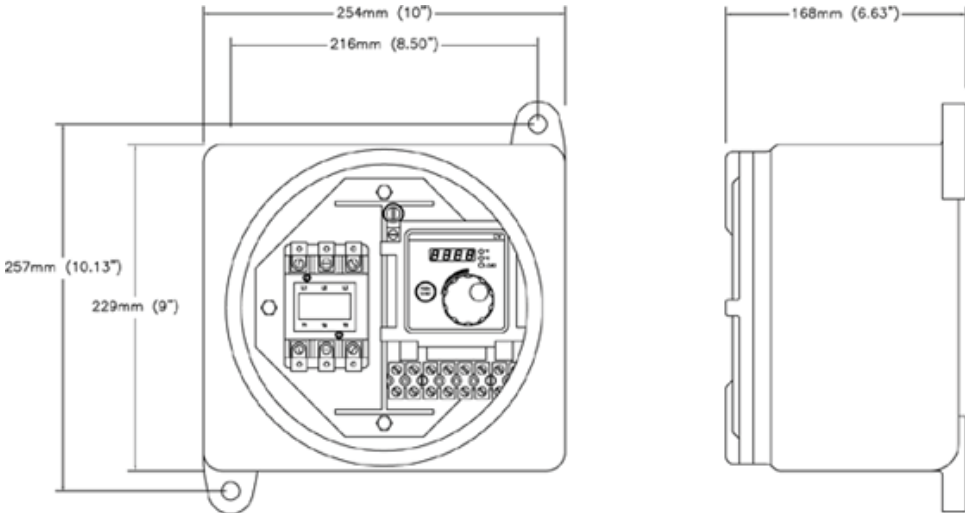

© March 2019

TE760–TC Thermostat

Hazardous Location Thermostat

CSA:
Class I, Division 1, Groups B, C, D
Class II, Division 1, Groups E, F, G
Class I, Zone 1, Ex d IIB+H_2

FM:
Class I, Division 1, Groups B, C, D
Class II, Division 1, Groups E, F, G
Class I, Zone 1, AEx d IIB+H_2

Annual Maintenance
Spray a coat of lubricant and rust preventative such as CRC Store and Lube on the electrical wire connections.

Installation

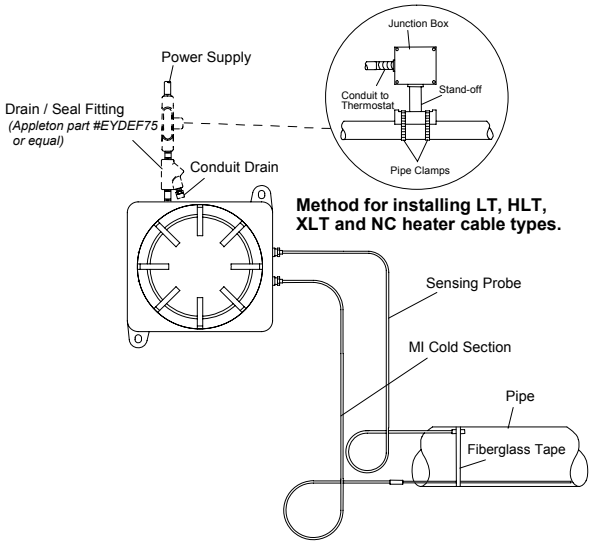

Method for installing LT, HLT, XLT and NC heater cable types.

Installation Notes

- Securely mount thermostat enclosure and connect to power wiring.
- Verify thermostat set point is at the desired maintenance temperature.
- Close enclosure cover to prevent damage from inclement weather.
- Insure all fittings associated with the power wiring are installed per applicable codes.
- When conduit type systems are used, low point drains / conduit drains are highly recommended.

Wiring Diagram

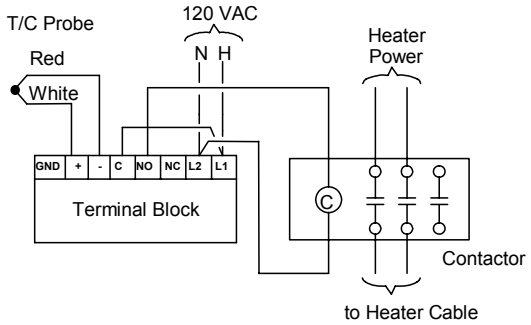

© March 2019

Type CM–1 Microprocessor Based Heater Cable Monitoring System

cETLus:
Class I, Division 2, Groups B, C, D
Temperature Code: T3C (160°C)
-40°C ≤ Tamb ≤ +40°C
Temperature Code: T3A (180°C)
-40°C ≤ Tamb ≤ +55°C

Applications

- This heater cable monitoring system (referenced to as “CM-1”) continually monitors the status of both series and parallel styles of electric heat tracing cables and panels.
- This system monitors the supply voltage and current flow to each heating device. With the addition of continuity monitoring devices (referenced to as “CMD”), this system monitors both bus wires in parallel styles of heating cable.
- When used in conjunction with ground fault branch breakers, the CM-1 serves as an automatic alarm system for any ground fault condition.

System Components

- The cable monitoring system is mounted in a NEMA 4 or 4X enclosure that can be wall or rack mounted.
- The unit is normally located in close proximity to the breaker panel feeding the heat tracing system.
- The system is available in configurations up to 48 circuits and is environmentally hardened for use in various plant locations.
- All standard versions of the CM-1 can be installed in Division 2 hazardous locations without any special considerations.
- Individual CM-1 systems throughout a facility can be connected to a central PC running RS-485 host communications software.
- Alarm status and alarm acknowledgment can be accessed from the central location.
- Scanner Board
  - The system is controlled by a microprocessor-based scanner that systematically interrogates all circuit parameters and compares actual vs programmed data.
  - The scanner board is environmentally hardened to allow the system to be installed in operating sections of the facility subject to high ambient temperatures.
  - The scanner receives data from the sensor cards via a data bus connection.
  - Output information is continually displayed through the door of the enclosure by the display unit.
  - Each scanner board can handle from 4 to 24 circuits.
- Display Unit
  - The display unit is visible through a protective Plexiglas panel in the door of the assembly.
  - All indicators are LED to provide visibility in all light conditions.
  - The unit displays the circuit being monitored on 0.5 inch read outs and heater system status of each circuit on large easy-to-see bar lights.
- Sensor Cards
  - The sensor cards monitor the electrical parameters of each heating circuit.
  - Each sensor card monitors up to 4 circuits for voltage, current and continuity.
  - An adjustable potentiometer allows the low current alarm level to be set for each circuit.
  - Heater power wiring is connected to 30 amp terminal blocks mounted directly on each sensor card.
  - Each individual circuit is designed to operate on voltages from 120 through 277 Vac.
- Continuity Monitoring Device
  - For continuity monitoring, parallel types of heating cables require the attachment of a bus monitor device at the end of each heater circuit.
  - This device is totally passive and generates no electrical noise or signals that might interfere with other equipment located in the same general area.
  - The scanner board looks for this device on each scan cycle to verify bus wire integrity over the entire length of cable.

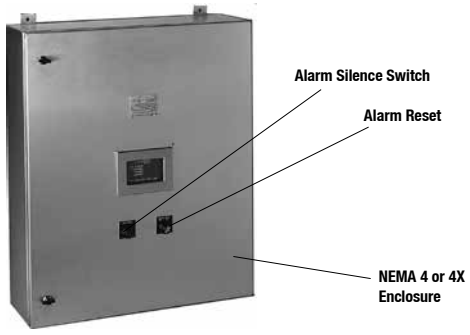

Features

- Ambient Temperature: -40° to +55°C (-40° to +130°F)
- Relative Humidity: 0-95% maximum, non-condensing, PC boards are conformal coated and special connectors are used.
- Enclosures:
  - NEMA 4, powder coated steel
  - NEMA 4X, Stainless Steel
- Display: Single line numeric LED circuit indication. LED bar indicators for Alarm status
- Power Input: 120Vac, 1.0A
- Voltage Range: 85 to 300Vac
- Current Range: 0.05 to 30.0A
- Continuity: Requires additional CMD device for each monitored circuit
- Alarm Output Rating: AC/DC Contact, 12-120V @ 0.1A maximum
- Control Input: Requires Dry Contact from control device(s) or -V Control Input Option
- Communications: RS-485, Modbus® Protocol

Certifications and Compliances:

- UL Standard: 508A Ed. 2
- CSA Standard: C22.2 No. 14-13, C22.2 No. 213-16
- ETL Listed: 101081616DAL-001
- Other Standards: ANSI/ISA 12.12.01-2015

Visit our website at www.nelsonheaters.com or contact us at United States: (800) 621-1506 | Europe: +33.3.22.54.13.90.
© March 2019
EMERSON

Type CM–1 Microprocessor Based Heater Cable Monitoring System

cETLus:
Class I, Division 2, Groups B, C, D
Temperature Code: T3C (160°C)
-40°C ≤ Tamb ≤ +40°C
Temperature Code: T3A (180°C)
-40°C ≤ Tamb ≤ +55°C

The selection below table allows for the proper specifying of the standard systems (example: CM-1-04-N4).

Catalog Numbering Guide

CM–1 — Product Family

YY — Number of Circuits (Groups of 4)
12X - (04X to 12X Circuit Max)
24 - (04 to 24 Circuit Max)
48 - (04 to 48 Circuit Max)

ZZ — Type of enclosure
N4 - NEMA 4
SS - Stainless Steel

V — Voltage Input Option

© March 2019

CM3 PLC Based Circuit Management System

ETL:
Class I, Division 2, Groups A, B, C, D
Temperature Code T4 (135ºC)

Description

- The system provides temperature monitoring and control of the trace heating system.
- The system automatically checks the health of the trace heating system.
- Negative trends are noted on a maintenance pending list, while more severe problems are removed from service and alarmed.

Applications

- This heat trace circuit management system (CM3) provides a compact, tightly integrated, factory assembled/tested solution for high density plant locations.
- The unit is based on a standard PLC platform, specifically integrated for use with electric heat trace systems.
- Benefits Include:
  - Optimized process control temperatures
  - Energy conservation
  - Elimination of separate ground fault branch circuit breakers
  - Automated trace heater monitoring
  - Predictive maintenance monitoring

Description of System Functions:

- Temperature Control
  - An RTD based temperature control function optimizes energy consumption, while maintaining tight temperature control on your process piping. High and low temperature alarms will alert you to any upset conditions that could cause problems with your processes.
- Heat Trace Ground Fault Protection
  - The system provides continuous monitoring of ground fault conditions with each circuit, eliminating the need for expensive ground fault protection branch circuit breakers.
  - Separate values can be inserted for alarm and trip functions, alerting you to problems before the problem becomes severe enough to require the heat trace be taken out of service.
  - Adjustable trip values allow you to compensate for normal capacitive ground fault leakage that occurs in cables.
- Predictive Maintenance System
  - Ground fault and load current values are compared to earlier values.
  - Adverse trends in a trace heater will get that circuit put on a maintenance log alert system.
  - This log allows the limited maintenance resources to be optimally deployed.
- Heat Trace Power Output Monitoring
  - Adjustable high and low load current alarms for each heat trace circuit provide a constant monitor of the power output of each heat tracer.
  - A low current alarm can identify the loss of a heater segment before the pipe can plug up and stop the process.
  - A high current alarm can identify a developing short circuit in the tracer allowing the circuit to be taken off line with a minimum of damage to the rest of the heat tracer.
- Automatic Testing
  - The system will continuously test the system, even when it is not in use.
  - This allows any problems to be identified as they occur, rather than allowing problems to cascade over a long period.
  - The unit turns each circuit on at selected intervals and checks for ground fault leakage and load currents.
  - Any problems will be alarmed.



CM340–12–C–P



CM340–4X–SSR

© March 2019

CM3 PLC Based Circuit Management System

ETL:
Class I, Division 2, Groups A, B, C, D
Temperature Code T4 (135ºC)

Features

- Temperature control
  - Heat Trace power control
  - Adjustable control temperature
  - Adjustable high and low temperature alarms
  - Adjustable dead band
- Interface
  - Color touch screen operator interface
  - Displays all alarms
  - Displays actual temperature
  - Displays heat trace circuit status- on or off
  - Displays actual heat trace ground fault and load currents
  - Displays all set points
  - Global programming
  - Intuitive, easy to navigate
- Automated monitoring
  - Testing of heat trace circuit – voltage, current, ground fault
  - Predictive maintenance, trend monitoring of heat trace
- Heat Trace
  - Load switching, 24 Amps, 120 Vac - 600 Vac (EMR)
  - Load switching, 30 Amps, 120 Vac - 600 Vac (SSR)
  - Adjustable ground fault alarm
  - Adjustable ground fault trip
  - Adjustable low current alarm
  - Adjustable high current alarm
- Other
  - High Density – up to 40 circuits
  - NEMA 4, 4X, 12 constructions
  - PLC based system
  - Proven, robust heat trace control program
  - Processor failure alarm
  - RTD sensor probe failure
  - Modbus® RTU communications
  - All data accessible thru communications port

Certifications and Compliances

- EMR Versions
  - Conforms to UL508A, Certified to CSA-22.2 No 14-05
  - Ordinary Locations
  - Hazardous (Classified) Locations (-P option)
    - Class I, Division 2, Groups A, B, C, D
    - Temperature Code T4 (+135ºC)
- SSR Versions
  - Conforms to UL508A, Certified to CSA-22.2 No 14-05
  - Ordinary Locations
  - Hazardous (Classified) Locations
    - Class I, Division 2, Groups B, C, D
    - Class I, Zone 2, Groups IIB + H_2
    - Temp Code T4 (+135ºC)

Specifications

Control power	120-240 Vac, 1-phase, 50/60 Hz	**Auto–Test cycle**	1-720 hrs., adjustable
Heat trace load	120-277 Vac (R2), 120-600 Vac (C), 120-600 Vac (SSR)	**Predictive maintenance log**	On or Off
Processor	Schneider Electric M340 platform	**Predictive log trigger values**	adjustable
Display	Color LED, CFL 75,000h	**Sensor inputs**	RTD, 100-ohm, platinum, 3-wire
Operator interface	Analog touch pad, 1,024 x 1,024	**Ambient Control Option**	1-40, adjustable
Programming options	By individual channel or global	**Sensor failure mode**	On or off for each channel
Temperature Units	°F or °C	**Alarm contact**	Common for all alarms
Channel (circuit) activation	On or Off for each channel	**Alternate alarm contact**	Ground fault only
Control temperature set point	-328 to +1392 °F range, adjustable	**Ambient temperature**	-20°C to +40°C
Control dead band	adjustable	**Relative humidity, NEMA 12**	0-85%, non-condensing
High temperature alarm	adjustable	**Relative humidity, NEMA 4, 4X**	0-100%
Low temperature alarm	adjustable	**Enclosure options**	NEMA 4 polyester powder coated NEMA 4X 304 stainless steel NEMA 12 polyester powder coated
Heat trace low current alarm	1-30 amps, adjustable		
Heat trace high current alarm	1-30 amps, adjustable		
Ground fault alarm	1-500ma, adjustable	**Approvals**	ETL Control: 4000560
Ground fault trip	1-500ma, adjustable		

© March 2019

ETL:
Class I, Division 2, Groups A, B, C, D
Temperature Code T4 (135ºC)

EMR Version Output Module Selection Table

		Heat Tracing Load Voltages							
Control Points	**Panel Size ①②**	**120 Vac (2P)**	**208 Vac (2P)**	**230 Vac (2P)**	**240 Vac (2P)**	**277 Vac (2P)**	**347 Vac (2P)**	**480 Vac (2P)**	**600 Vac (2P)**
8	A	R2	R2	R2	R2	R2	-	-	-
8	B	C	C	C	C	C	C	C	C
16	A	R2	R2	R2	R2	R2	-	-	-
16	B	C	C	C	C	C	C	C	C
24	A	R2	R2	R2	R2	R2	-	-	-
24	B	C	C	C	C	C	C	C	C
32	A	R2	R2	R2	R2	R2	-	-	-
32	B	C	C	C	C	C	C	C	C
40	C	R2	R2	R2	R2	R2	-	-	-
40	D	C	C	C	C	C	C	C	C

① Panel A/B- 768A maximum per panel, 24A maximum per circuit, 60 Hz, 1-Phase
② Panel C/D- 960A maximum per panel, 24A maximum per circuit, 60 Hz, 1-Phase

SSR Version Output Module Selection Table

		Heat Tracing Load Voltages							
Control Points	**Panel Size ③④⑤**	**120 Vac (1P)**	**208 Vac (2P)**	**230 Vac (1P)**	**240 Vac (2P)**	**277 Vac (1P)**	**347 Vac (1P)**	**480 Vac (2P)**	**600 Vac (2P)**
4	A	—	SSR2	—	SSR2	—	—	SSR2	SSR2
8	A	SSR	—	SSR	—	SSR	SSR	—	—
8	B	—	SSR2	—	SSR2	—	—	SSR2	SSR2
12	B	SSR	—	SSR	—	SSR	SSR	—	—
12	B	—	SSR2	—	SSR2	—	—	SSR2	SSR2
16	B	SSR	—	SSR	—	SSR	SSR	—	—
16	C	—	SSR2	—	SSR2	—	—	SSR2	SSR2
20	B	SSR	—	SSR	—	SSR	SSR	—	—
20	C	—	SSR2	—	SSR2	—	—	SSR2	SSR2
24	B	SSR	—	SSR	—	SSR	SSR	—	—
32	C	SSR	—	SSR	—	SSR	SSR	—	—
40	C	SSR	—	SSR	—	SSR	SSR	—	—

Note:
③ Panel A- 200A maximum per panel, 30A maximum per circuit, 60 Hz, 1-Phase
④ Panel B- 600A maximum per panel, 30A maximum per circuit, 60 Hz, 1-Phase
⑤ Panel C- 1000A maximum per panel, 30A maximum per circuit, 60 Hz, 1-Phase

© March 2019

ETL:
Class I, Division 2, Groups A, B, C, D
Temperature Code T4 (135ºC)

CM3 Enclosure Sizes Dimensions in Centimeters (Inches)

Panel Size	Height	Width	Depth
EMR Versions			
A	183 (72)	92 (36)	31 (12)
B	183 (72)	153 (60)	31 (12)
C	214 (84)	92 (36)	41 (16)
D	219 (86)	153 (60)	31 (12)
SSR Versions			
A	92 (36)	92 (36)	41 (16)
B	183 (72)	92 (36)	41 (16)
C	214 (84)	92 (36)	61 (24)

© March 2019

CM3 PLC Based Circuit Management System

ETL:
Class I, Division 2, Groups A, B, C, D
Temperature Code T4 (135ºC)

The CM3 Circuit Management System is available in multiple configurations of circuit count, enclosure ratings and power ratings. The selection tables below allow for the proper specifying of the standard systems (example: CM332-4X-R2). For custom configurations or modifications, consult factory.

Catalog Numbering Guide

CM3
Product Family

32
Select multiples of 8 circuits up to 40 circuits

4X
Specify Enclosure Type
4 - NEMA 4, polyester powder coated steel
4X - NEMA 4x, type 304 stainless steel
12 - NEMA 12, polyester powder coated steel

R2
Specify Power Output Modules
R2 - 24A @ 277 Vac, DPST switching
C - 24A @ 600 Vac DPST switching
SSR – 30A @ 347 Vac, SPST switching
SSR2 – 30A @ 600 Vac, DPST switching

EC
Specify Options
ET - Ethernet capable HMI with web gate
EC - External Modbus® Serial communications
NC - External Modbus® TCP/IP Communications
P - Type Z purge for Class I, Divison 2 installations

Visit our website at www.nelsonheaters.com or contact us at United States: (800) 621-1506 | Europe: +33.3.22.54.13.90.
© March 2019
EMERSON

CM 2201 Single Point Circuit Management System

CSA:
Class I, Division 2, Groups A, B, C, D
Class I, Zone 2, Groups IIC
Temperature Code T4, 135°C

Applications

- The Nelson Single Point Circuit Management System (referenced to as "CM-2201") is a microprocessor based digital control and monitoring system that has been specifically designed for stand-alone or networked electric heat tracing applications.
- This system provides temperature control and heater cable monitoring while communicating additional information to operations personnel such as temperature alarms, voltage and current alarms, ground fault leakage, sensor failures and communications failures.

System Components

- The circuit management system is housed in a NEMA 4X durable molded fiberglass polyester enclosure that can be wall or rack mounted.
- The system is provided with dual pole solid-state heater switching and is environmentally hardened for use in various plant locations.
- The standard versions of the CM-2201 can be installed in Class 1, Division 2 hazardous locations without special requirements. Up to 256 individual systems can be connected to a single RS-485 data highway allowing communications to a host device.
- The CM-2201 is fully compatible with PC based communications software via Modbus® RTU protocol.
- All alarm and control functions can be accessed from the central location.

Features

- Easy to Use Interface
  - The 2 line, 16 characters/row, alphanumeric LCD display enables the use of English language prompts for setpoint entry and operation. There are no cryptic codes or key press combinations to remember.
- On/Off or Proportional Control
  - The desired control mode can be easily selected via the front panel user interface.
- Ground Fault Alarm and Trip Settings
  - Separate alarm and trip settings for ground fault interrupt allow alarming of developing faults prior to circuit interruption
- Dual RTD Input
  - The optional second RTD can easily be configured in a variety of ways, including working with one RTD / two RTDs and High Temperature Cutout.
- Programmable Auto Test Cycle
  - The user can select an interval from 1 to 24 hours to have the unit automatically check the heater operating current and ground fault conditions.
  - This allows problems to be detected and fixed before the heating system is needed.
- Host Communications
  - The RS-485 Modbus® RTU communications capability is included as a standard feature.
  - There are no expensive "daughter boards" or firmware updates required.
- 2 Line, 16 Characters/row: LCD Display
- Temperature Input Range: -50°C to +500°C (-58°F to + 932°F)
- Enclosure: NEMA Type 4X
- Current Rating: 30A max (resistive load only)
- Ambient Temperature: -40°C to + 40°C (-40°F to +104°F); Start up at -20°C (-4°F)



- Current Monitoring: 0.1 to 40A
- Ground Fault Monitoring: 10mA to 500mA
- Voltage Range: 100Vac to 277 Vac
- Temperature Input
  - Range: -50 to +500°C (-58 to +932°F)
  - Accuracy: ±2°C
  - Repeatability: ±1°C
  - RTD: 100 ohm platinum, 3-wire RTD, (lead compensated up to 20 ohms)
  - RTD Configuration: Single, Backup, Highest, Lowest, Average or High Temperature Cutout
  - RTD Fail-safe: Heater ON or OFF
- Heater Switching
  - Configuration: Two-pole, dual SSR per phase, 800 amp, 1 cycle inrush
  - Ratings:100-277 Vac, 30A continuous
  - Line Frequency: 50 or 60Hz
  - Current Measurement: 0.1 to 40A 3%±0.1A
  - GF Measurement: 10 to 500mA 5%±2mA
  - Voltage Measurement: 0 to 300Vac 3%±2V
- Control Power
  - Power Requirement: Control power from heater voltage, 110-277 Vac, 12VA max
- Communications
  - Port:(1) RS-485
  - Protocol: Modbus® RTU
  - Transmission Rate: up to 115Kbps
  - Wiring: 2-wire, shielded, twisted pair
  - Maximum Wiring Run: 4,000 feet without repeater
  - Modules per Network: Up to 256
- Measured Values
  - Temperature: -50 to +500°C (-58 to +932°F)
  - Minimum Temperature: -50 to +500°C (-58 to +932°F)
  - Maximum Temperature: -50 to +500°C (-58 to +932°F)
  - Heater Current: 0.1 to 30A
  - Ground Fault Current: 10 to 500mA
  - Min. Heater Voltage: 90Vac
  - Maximum Heater Voltage: 300Vac
  - Weight: 4.0kg (8.9lb)

For custom configurations or modifications of CM2201, consult Nelson Heat Trace. Nelson Heat Tracing Systems products are supplied with a limited warranty.

© March 2019

CSA:
Class I, Division 2, Groups A, B, C, D
Class I, Zone 2, Groups IIC
Temperature Code T4, 135°C

- User Interface
  - Display: 16-character x 2-line LCD Alphanumeric display
  - Panel Indicators:
    - Power On
    - Heater On
    - Serial Communication Active
    - System Failure
    - Process Alarm
  - Keypad:
    - 9 touch keys, polyester faceplate
    - Actual, Alarm, Program, Reset
    - Select Up, Select Down, Select Right, Select Left
    - Enter
  - Security: Controller parameters password protected
- Environment
  - Operating Temperature: -40°C to +40°C Starting at -20°C
  - Conformal Coating: Boards conformal coated for hostile environments
- Enclosure
  - Type: NEMA Type 4X Molded Fiberglass Polyester enclosure
  - Size: 10”H x 8”W x 6”D
  - Features: Quick release latches to open door.
- Alarm Output
  - Alarm: Normally Open contacts
  - One DC opto-isolated contact
  - One AC opto-isolated contact
  - Alarm Rating: DC contact: 30Vdc/100mA max
  - AC contact: 24-277 Vac @ 0.5A max
  - Alarm Output: LED Indication
- Alarm Function
  - Temperature: High Temperature Alarm / Low Temperature Alarm
  - Current: Low Current Alarm / High Current Alarm
  - Ground Fault Current: Ground Fault Current Alarm / Ground Fault Current Trip
  - Voltage: High Voltage Alarm / Low Voltage Alarm
  - Hardware: Self-Check Failure / Switch Fail / RTD Failure / Power Failure
- User-Definable Options
  - Heater Name or Tag: 16 Character Alphanumeric
  - Temperature Units: °C or °F
  - Control Method: ON/OFF with Deadband or Proportional
  - Deadband: 1 to 5°C (1 to 10°F)
  - Power Limit: 20% to 100% in 10% steps, off
  - Soft Start: 10 to 999s, off
  - Auto Check: 1 to 720hrs, off
  - Temperature Setpoint: -50 to 500°C (-58 to +932°F), off, none
  - High Temp. Alarm: -50 to 500°C (-58 to +932°F), off
  - Low Temp. Alarm: -50 to 500°C (-58 to +932°F), off
  - High Current Alarm: 0.1 to 30A, off
  - Low Current Alarm:0.1 to 29A, off
  - Ground Fault Alarm: 10 to 495mA, off
  - Ground Fault Trip: 15 to 500mA, off
  - High Voltage Alarm: 95V to 280V, off
  - Low Voltage Alarm: 85V to 270V, off
  - Override: ON/OFF
  - Alarm Contacts: Solid State – Normally Opened

Certifications and Compliances

- UL Standard: 50 Ed. 12, 916 Ed. 4
- CSA Standard: C22.2 No. 213-16, C22.2 No. 94-R2011, C22.2 No. 142-R2014
- cCSAus Certified: LR91382
- Other Standards: ANSI/ISA 12.12.01-2015

For custom configurations or modifications of CM2201, consult Nelson Heat Trace. Nelson Heat Tracing Systems products are supplied with a limited warranty.

© March 2019

CM 2202 Dual Point Circuit Management System

CSA:
Class I, Division 2, Groups A, B, C, D
Class I, Zone 2, Groups IIC
Temperature Code T4, 135°C

Applications

- The Nelson Dual Point Circuit Management System (referenced to as “CM-2202”) is a microprocessor based digital control and monitoring system that has been specifically designed for stand-alone or networked electric heat tracing applications.
- This system provides temperature control and heater cable monitoring while communicating additional information to operations personnel such as temperature alarms, voltage and current alarms, ground fault leakage, sensor failures and communications failures.

System Components

- The circuit management system is housed in a NEMA 4X durable molded fiberglass polyester enclosure that can be wall or rack mounted.
- The system is provided with dual pole solid-state heater switching and is environmentally hardened for use in various plant locations.
- The standard versions of the CM-2202 can be installed in Class 1, Division 2 hazardous locations without special requirements. Up to 256 individual systems can be connected to a single RS-485 data highway allowing communications to a host device.
- The CM-2202 is fully compatible with PC based communications software via Modbus® RTU protocol.
- All alarm and control functions can be accessed from the central location.

Features

- Easy to Use Interface
  - The 2 line, 16 characters/row, alphanumeric LCD display enables the use of English language prompts for setpoint entry and operation. There are no cryptic codes or key press combinations to remember.
- On/Off or Proportional Control
  - The desired control mode can be easily selected via the front panel user interface.
- Ground Fault Alarm and Trip Settings
  - Separate alarm and trip settings for ground fault interrupt allow alarming of developing faults prior to circuit interruption
- Dual RTD Input
  - The optional second RTD can easily be configured in a variety of ways, including working with one RTD / two RTDs and High Temperature Cutout.
- Programmable Auto Test Cycle
  - The user can select an interval from 1 to 24 hours to have the unit automatically check the heater operating current and ground fault conditions.
  - This allows problems to be detected and fixed before the heating system is needed.
- Host Communications
  - The RS-485 Modbus® RTU communications capability is included as a standard feature.
  - There are no expensive “daughter boards” or firmware updates required.
- 2 Line, 16 Characters/row: LCD Display
- Temperature Input Range: -50°C to +500°C (-58°F to +932°F)
- Enclosure: NEMA Type 4X
- Current Rating: 30A max (resistive load only)
- Ambient Temperature: -40°C to + 40°C (-40°F to +104°F); Start up at -20°C (-4°F)



- Current Monitoring: 0.1 to 40A
- Ground Fault Monitoring: 10mA to 500mA
- Voltage Range: 100 Vac to 277 Vac
- Temperature Input
  - Range: -50°C to +500°C (-58°F to +932°F)
  - Accuracy: ±2°C
  - Repeatability: ±1°C
  - RTD: 100 ohm platinum, 3-wire RTD, (lead compensated up to 20 ohms)
  - RTD Configuration: Single, Backup, Highest, Lowest, Average or High Temperature Cutout
  - RTD Fail-safe: Heater ON or OFF
- Heater Switching
  - Configuration: Two-pole, dual SSR per phase, 800 amp, 1 cycle inrush
  - Ratings:100-277 Vac, 30A continuous
  - Line Frequency: 50 or 60Hz
  - Current Measurement: 0.1 to 40A 3%±0.1A
  - GF Measurement: 10 to 500mA 5%±2mA
  - Voltage Measurement: 0 to 300 Vac 3%±2V
- Control Power
  - Power Requirement: Control power from heater voltage, 110-277 Vac, 12VA max
- Communications
  - Port:(1) RS-485
  - Protocol: MODBUS® RTU
  - Transmission Rate: up to 115Kbps
  - Wiring: 2-wire, shielded, twisted pair
  - Maximum Wiring Run: 4,000 feet without repeater
  - Modules per Network: Up to 256
- Measured Values
  - Temperature: -50 to 500°C (-58 to +932°F)
  - Minimum Temperature:-50 to +500°C (-58 to +932°F)
  - Maximum Temperature: -50 to +500°C (-58 to +932°F)
  - Heater Current: 0.1 to 30A
  - Ground Fault Current: 10 to 500mA
  - Min. Heater Voltage: 90 Vac
  - Maximum Heater Voltage: 300 Vac
  - Weight: 4.0kg (8.9lb)

For custom configurations or modifications of CM2202, consult Nelson Heat Trace. Nelson Heat Tracing Systems products are supplied with a limited warranty.

© March 2019

CM 2202 Dual Point Circuit Management System

CSA:
Class I, Division 2, Groups A, B, C, D
Class I, Zone 2, Groups IIC
Temperature Code T4, 135°C

- User Interface
  - Display: 16-character x 2-line LCD Alphanumeric display
  - Panel Indicators:
    - Power On
    - Heater On
    - Serial Communication Active
    - System Failure
    - Process Alarm
  - Keypad:
    - 9 touch keys, polyester faceplate
    - Actual, Alarm, Program, Reset
    - Select Up, Select Down, Select Right, Select Left
    - Enter
  - Security: Controller parameters password protected
- Environment
  - Operating Temperature: -40°C to +40°C Starting at -20°C
  - Conformal Coating: Boards conformal coated for hostile environments
- Enclosure
  - Type: NEMA Type 4X Molded Fiberglass Polyester enclosure
  - Size: 12”H x 10”W x 6”D
  - Features: Quick release latches to open door.
- Alarm Output
  - Alarm: Normally Open contacts
  - One DC opto-isolated contact
  - One AC opto-isolated contact
  - Alarm Rating: DC contact: 30Vdc/100mA max
  - AC contact: 24-277 Vac @ 0.5A max
  - Alarm Output: LED Indication
- Alarm Function
  - Temperature: High Temperature Alarm / Low Temperature Alarm
  - Current: Low Current Alarm / High Current Alarm
  - Ground Fault Current: Ground Fault Current Alarm / Ground Fault Current Trip
  - Voltage: High Voltage Alarm / Low Voltage Alarm
  - Hardware: Self-Check Failure / Switch Fail / RTD Failure / Power Failure
- User-Definable Options
  - Heater Name or Tag: 16 Character Alphanumeric
  - Temperature Units: °C or °F
  - Control Method: ON/OFF with Deadband or Proportional
  - Deadband: 1 to 5°C (1 to +10°F)
  - Power Limit: 20% to 100% in 10% steps, off
  - Soft Start: 10 to 999s, off
  - Auto Check: 1 to 720hrs, off
  - Temperature Setpoint: -50 to 500°C (-58 to +932°F), off, none
  - High Temp. Alarm: -50 to 500°C (-58 to +932°F), off
  - Low Temp. Alarm: -50 to 500°C (-58 to +932°F), off
  - High Current Alarm: 0.1 to 30A, off
  - Low Current Alarm:0.1 to 29A, off
  - Ground Fault Alarm: 10 to 495mA, off
  - Ground Fault Trip: 15 to 500mA, off
  - High Voltage Alarm: 95V to 280V, off
  - Low Voltage Alarm: 85V to 270V, off
  - Override: ON/OFF
  - Alarm Contacts: Solid State – Normally Opened

Certifications and Compliances

- UL Standard: 50 Ed. 12, 916 Ed. 4
- CSA Standards: C22.2 No. 213-16, C22.2 No. 94-R2011, C22.2 No. 142-R2014
- cCSAus Certified: LR91382
- Other Standards: ANSI/ISA 12.12.01-2015

For custom configurations or modifications of CM2202, consult Nelson Heat Trace. Nelson Heat Tracing Systems products are supplied with a limited warranty.

Visit our website at www.nelsonheaters.com or contact us at United States: (800) 621-1506 | Europe: +33.3.22.54.13.90.
© March 2019
EMERSON

Type AP–240 Vac Maximum

Ambient/Contactor Controlled Distribution Panel

ETL:
Rated for Ordinary (Unclassified) Locations

Applications

- This ambient distribution panel has been specifically designed for use in freeze protection heat tracing systems operating in conjunction with a single control source.
- This control source can be in the form of an ambient thermostat, snow sensing controller or any similar device. The ambient distribution panel can operate in two modes, automatically with the use of a control device or in manual override.
- The panel can also be completely turned off during off-season periods.

System Components

- The ambient distribution panel is supplied in a NEMA 4 or 4X enclosure that can be wall or rack mounted.
- Standard versions are available in 12, 30 and 42 -pole options, both three-phase and single-phase.
- Branch breakers are available in standard trip or ground fault equipment protection devices.
- Main breaker and contactor combinations are selectable from 100 Amp up to a maximum of 225 Amp.
- The panel is supplied with a three-position selector switch; power available indicating light and a panel energized indicating light.
- Options are provided for external door disconnect.

Features

- Enclosures: NEMA 4 Powder Coated Steel or NEMA 4X Stainless Steel
- Voltage Options: 120/208 Three Phase Power or 120/240 Single Phase Power
- Branch Circuit Breakers: 1-Pole, 15-40A Standard; 1-Pole, 15-30A GFEPD; 2-Pole, 15-50A Standard; 2-pole, 15-50A GFEPD
- Main Bus Sizes: 12-Pole Option, 100A; 30-Pole Option, 225A; 42-Pole Option, 225A

Certifications and Compliances

- UL Standard: 508A
- CSA Standard: C22.2 No. 14

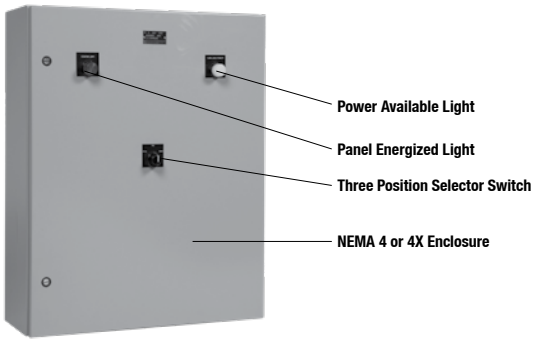

© March 2019

Type AP–240 Vac Maximum

Ambient/Contactor Controlled Distribution Panel

ETL:
Rated for Ordinary (Unclassified) Locations

Catalog Numbering Guide

AP

Product Family
AP - Ambient Control Panel with USA Code Approved breakers

12

Size of Panelboard (available breaker poles)
12 - (12) 1-pole breakers or (6) 2-pole breakers
30 - (30) 1-pole breakers or (14) 2-pole breakers
42 - (42) 1-pole breakers or (20) 2-pole breakers

P

Product Family
P - 3 phase power (208/120 Vac)
N - 1 phase power (240/120 Vac)

4

Type of Enclosure
4 - NEMA 4 (use for NEMA 12 applications)
4X - NEMA 4X

MB100

Main Breaker Selection ①
MB100 - 100 amps
MB125 - 125 amps
MB150 - 150 amps
MB175 - 175 amps
MB200 - 200 amps
MB225 - 225 amps

D

Options
D - Disconnect Enclosure

① *Note: Standard 12-Pole option is limited to 100A maximum main breaker sizing.*

Visit our website at www.nelsonheaters.com or contact us at United States: (800) 621-1506 | Europe: +33.3.22.54.13.90.
© March 2019
EMERSON

Type AP–480 Vac Maximum

Ambient/Contactor Controlled Distribution Panel

ETL:
Rated for Ordinary (Unclassified) Locations

Applications

- This ambient distribution panel has been specifically designed for use in freeze protection heat tracing systems operating in conjunction with a single control source.
- This control source can be in the form of an ambient thermostat, snow sensing controller or any similar device.
- The ambient distribution panel can operate in two modes, automatically with the use of a control device or in manual override.
- The panel can also be completely turned off during off-season periods.

System Components

- The ambient distribution panel is supplied in a NEMA 4 or 4X enclosure that can be wall or rack mounted.
- Standard versions are available in 12 (AP6), 30 (AP14) and 42 (AP20)-pole options.
- Branch breakers are available in standard trip or ground fault equipment protection devices.
- Main breaker and contactor combinations are selectable from 100 Amp up to a maximum of 225 Amp.
- The panel is supplied with a three-position selector switch; power available indicating light and a panel energized indicating light.
- Options are provided for external door disconnect.

Features

- Enclosures: NEMA 4 Powder Coated Steel or NEMA 4X Stainless Steel
- Voltage Options: 277/480 Three Phase Power
- Branch Circuit Breakers: 1-Pole, 15-60A Standard; 1-Pole, 15-60A GFEPD (requires 2-pole space); 2-Pole, 15-60A Standard; or 2-Pole, GFEPD (Not Available)
- Main Bus Sizes: 12-Pole (AP6) Option, 225A; 30-Pole (AP14) Option, 225A; or 42-Pole (AP20) Option, 225A

Certifications and Compliances

- UL Standard: 508A
- CSA Standard: C22.2 No. 14

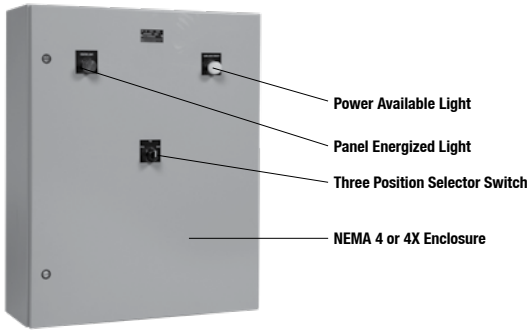

© March 2019

Type AP–480 Vac Maximum

Ambient/Contactor Controlled Distribution Panel

ETL:
Rated for Ordinary (Unclassified) Locations

Catalog Numbering Guide

AP

Product Family
AP - Ambient Control Panel with USA Code Approved breakers

6

Size of Panelboard (available breaker poles)
6 - (12) 1-pole breakers or (6) 2-pole breakers
14 - (30) 1-pole breakers or (14) 2-pole breakers
20 - (42) 1-pole breakers or (20) 2-pole breakers

P

Product Family
P - 3 phase power (480/277 Vac)

4

Type of Enclosure
4 - NEMA 4 (use for NEMA 12 applications)
4X - NEMA 4X

MB100

Main Breaker Selection
MB100 - 100 amps
MB125 - 125 amps
MB150 - 150 amps
MB175 - 175 amps
MB200 - 200 amps
MB225 - 225 amps

D

Options
D - Disconnect Enclosure
SA - Surge Arrestor (for MI heater applications)
S - Snowmelt application

Visit our website at www.nelsonheaters.com or contact us at United States: (800) 621-1506 | Europe: +33.3.22.54.13.90.
© March 2019

Type DP–240 Vac Maximum

Process Distribution Panel

ETL:
Rated for Ordinary (Unclassified) Locations

Applications

- This distribution panel has been specifically designed for use in process heat tracing systems that require a dedicated power source.
- This panel is generally utilized with heat tracing controlled by individual pipe sensing thermostats or in conjunction with any of Nelson Type CM Control and Monitoring Systems.

System Components

- The distribution panel is supplied in a NEMA 4 or 4X enclosure that can by wall or rack mounted.
- Standard versions are available in 12, 30 and 42-pole options, both three-phase and single-phase.
- Branch breakers are available in standard trip or ground fault equipment protection devices.
- Main breaker is selectable from 100 Amp up to a maximum of 225 Amp.
- An option is provided for external door disconnect.

Features

- Enclosures: NEMA 4 Powder Coated Steel or NEMA 4X Stainless Steel
- Voltage Options:120/208 Three Phase Power or 120/240 Single Phase Power
- Branch Circuit Breakers: 1-Pole, 15-40A Standard; 1-Pole, 15-30A GFEPD; 2-Pole, 15-50A Standard; 2-pole, 15-50A GFEPD
- Main Bus Sizes: 12-Pole Option, 225A; 30-Pole Option, 225A; 42-Pole Option, 225A

Certifications and Compliances

- UL Standard: 508A
- CSA Standard: C22.2 No. 14

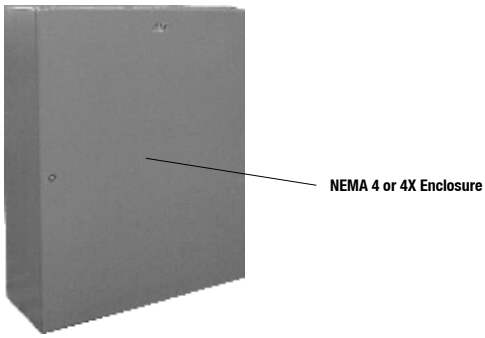

© March 2019

Type DP–240 Vac Maximum
Process Distribution Panel

ETL:
Rated for Ordinary (Unclassified) Locations

Catalog Numbering Guide

DP

Product Family
DP - Process Distribution Panel with USA Code Approved breakers

12

Size of Panelboard (available breaker poles)
12 - (12) 1-pole breakers or (6) 2-pole breakers
30 - (30) 1-pole breakers or (14) 2-pole breakers
42 - (42) 1-pole breakers or (20) 2-pole breakers

P

Product Family
P - 3 phase power (480/277 Vac)
N - 1 phase power (240/120 Vac)

4

Type of Enclosure
4 - NEMA 4 (use for NEMA 12 applications)
4X - NEMA 4X

MB100

Main Breaker Selection ①
MB100 - 100 amps
MB125 - 125 amps
MB150 - 150 amps
MB175 - 175 amps
MB200 - 200 amps
MB225 - 225 amps

D

Options
D - Disconnect Enclosure
SA - Surge Arrestor (for MI heater applications)

① *Note: Standard 12-Pole option is limited to 100A maximum main breaker sizing.*

© March 2019

Type DP–480 Vac Maximum
Process Distribution Panel

ETL:
Rated for Ordinary (Unclassified) Locations

Applications
- This distribution panel has been specifically designed for use in process heat tracing systems that require a dedicated power source.
- This panel is generally utilized with heat tracing controlled by individual pipe sensing thermostats or in conjunction with any of Nelson's Type CM Control and Monitoring Systems.

System Components
- The distribution panel is supplied in a NEMA 4 or 4X enclosure that can be wall or rack mounted.
- Standard versions are available in 12 (DP6), 30 (DP14) and 42 (DP20)-pole options.
- Branch breakers are available in standard trip or ground fault equipment protection devices.
- Main breaker is selectable from 100 Amp up to a maximum of 225 Amp.
- An option is provided for external door disconnect.

Features
- Enclosures: NEMA 4 Powder Coated Steel or NEMA 4X Stainless Steel
- Voltage Options: 277/480 Three Phase Power
- Branch Circuit Breakers: 1-Pole, 15-60A Standard; 1-Pole, 15-60A GFEPD (requires 2-pole space); 2-Pole, 15-60A Standard; 2-Pole, GFEPD (Not Available)
- Main Bus Sizes: 12-Pole (DP6) Option, 225A; 30-Pole (DP14) Option, 225A; 42-Pole (DP20) Option, 225A

Certifications and Compliances
- UL Standard: 508A
- CSA Standard: C22.2 No. 14

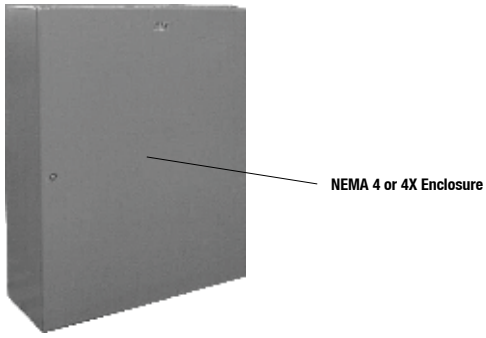

© March 2019

Type DP–480 Vac Maximum
Process Distribution Panel

ETL:
Rated for Ordinary (Unclassified) Locations

Catalog Numbering Guide

DP

Product Family
DP - Process Distribution Panel with USA Code Approved breakers

6

Size of Panelboard (available breaker poles)
6 - (12) 1-pole breakers or (6) 2-pole breakers
14 - (12) 1-pole breakers or (6) 2-pole breakers
20 - (42) 1-pole breakers or (20) 2-pole breakers

P

Product Family
P - 3 phase power (480/277 Vac)
N - 1 phase power (240/120 Vac)

4

Type of Enclosure
4 - NEMA 4 (use for NEMA 12 applications)
4X - NEMA 4X

MB100

Main Breaker Selection
MB100 - 100 amps
MB125 - 125 amps
MB150 - 150 amps
MB175 - 175 amps
MB200 - 200 amps
MB225 - 225 amps

D

Options
D - Disconnect Enclosure
SA - Surge Arrestor (for MI heater applications)

© March 2019

Type CLT Roof and Gutter Deicer

UL:
Ordinary (Unclassified) Locations

CSA:
Ordinary (Unclassified) Locations

Application

- The Nelson CLT heating cable provides a solution for ice dams that can build up and damage building roofs, gutters and downspouts.
- During winter months, snow and ice accumulation on roofs can prevent proper drainage of water when normal melting occurs. Water stands on the roof and can be refrozen during cold nights resulting in expansion and potential roof damage.
- CLT ice melting heaters are designed for installation on roofs and gutters to melt a pathway for the drainage of water. The heating cable's self-regulating feature provides additional benefits as well.

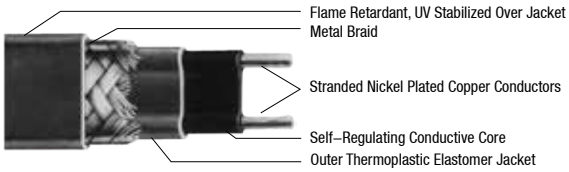

Features

- Nelson Type CLT heating cable is a parallel circuit, self-regulating electric heater.
- An irradiated cross-linked conductive polymer core is extruded over two multi-stranded, tin-plated, 18-gauge copper buss wires. The conductive core material increases or decreases its heat output in response to temperature changes.
- A waterproof thermoplastic elastomer over jacket is then extruded over the inner jacket for dielectric protection and additional moisture resistance.
- A copper braid is installed over the second jacket providing a continuous ground path.
- A flame retardant, UV stabilized polyolefin over jacket is then extruded over the braid.
- Lower Energy Consumption
  - The heater automatically reduces its power output as drainage tunnels are formed in the ice and snow.
- High Temperature Protection
  - Because the heater self regulates its power output as a function of temperature, it cannot overheat and melt or damage temperature sensitive roof coatings.

Accessories

- SLT-LPS: Power Connection Kit with Cable Seals
- SLT-RC: Roof Clips
- SLT-C: Roof Clips (Universal)
- SLT-D: Downspout Hangers
- SLT-S: Splice Kit – Heat Shrink
- SLT-E: End Termination Cable Seals – Heat Shrink
- AT-50: Aluminum Foil Tape, 50 Yards/Roll

Certifications and Compliances

- UL Listed: E33597
- CSA Standard: C22.2 No. 130-16
- CSA Certified: LR42103
- Other Standard: IEEE 515.1-2012

© March 2019

Type CLT Roof and Gutter Deicer

UL:
Ordinary (Unclassified) Locations

CSA:
Ordinary (Unclassified) Locations

Total Cable Requirements
The total cable length for deicing is determined by including all elements of the roof system that need protection. Use the following tables to determine the total length of cable required.

Item	Cable Length/Item Length m (ft)	Comments
Gutter	0.3 (1.0)	1 Trace/15 cm (6 in) gutter width
Downspout	0.6 (2.0)	Unless downspout is on end of circuit, the cable is looped down and back
Roof Valley	1.8 (6.0)	Per Valley
Dormer	0.3 (1.0)	Cable length/Length of dormer perimeter

Cable Length Required for Roof Overhangs (Length of Cable per Length of Roof)			
Eave Overhang m (ft)	Feet of Cable Loop Height m (ft)	Shingle Roof m (ft)	Metal Roof m (ft)
0.30 (1.0)	0.46 (1.5)	0.56 (1.83)	0.76 (2.50)
0.61 (2.0)	0.76 (2.5)	0.81 (2.67)	1.07 (3.50)
0.91 (3.0)	1.07 (3.5)	1.12 (3.67)	1.37 (4.50)
1.22 (4.0)	1.37 (4.5)	1.42 (4.67)	1.68 (5.50)

Visit our website at www.nelsonheaters.com or contact us at United States: (800) 621-1506 | Europe: +33.3.22.54.13.90.
© March 2019
EMERSON

Type CLT Roof and Gutter Deicer

UL:
Ordinary (Unclassified) Locations

CSA:
Ordinary (Unclassified) Locations

Selection Table

Service Voltage	Power Output in Ice Watts/m (Watts/ft)	Maximum Segment Length m (ft)	Minimum Installation Temperature °C (°F)	Current Load A/m (A/ft) –7°C (20°F) Start–Up	–18°C (0°F) Start–Up	–29°C (–20°F) Start–Up	–40°C (–40°F) Start–Up	Catalog Number
120	32 (9.9)	50 (165)	-37 (-35)	0.446 (0.136)	0.499 (0.152)	0.554 (0.169)	0.610 (0.186)	**CLT5-JT**
208	26 (7.8)	98 (320)	-37 (-35)	0.176 (0.054)	0.197 (0.060)	0.220 (0.067)	0.241 (0.073)	**CLT25-JT**
220	28 (8.6)	98 (320)	-37 (-35)	0.194 (0.059)	0.217 (0.066)	0.243 (0.074)	0.265 (0.081)	
240	32 (9.9)	101 (330)	-37 (-35)	0.223 (0.068)	0.249 (0.076)	0.279 (0.085)	0.305 (0.093)	
277	40 (12.3)	102 (335)	-37 (-35)	0.277 (0.084)	0.309 (0.094)	0.346 (0.105)	0.378 (0.115)	

Circuit Breaker Selection

Start–Up Temp. °C (°F)	Maximum Length Meters (Feet) Vs. Circuit Breaker Size 120Vac 15A	120Vac 20A	120Vac 30A	240Vac 15A	240Vac 20A	240Vac 30A	240Vac 40A
-7 (20)	34 (110)	44 (145)	67 (220)	67 (220)	90 (295)	134 (440)	180 (590)
-18 (0)	30 (100)	40 (130)	59 (195)	59 (195)	79 (260)	120 (395)	160 (525)
-29 (-20)	27 (90)	37 (120)	53 (175)	53 (175)	72 (235)	108 (355)	145 (475)
-40 (-40)	24 (80)	32 (105)	49 (160)	49 (160)	66 (215)	98 (320)	131 (430)

Notes:

1. *Maximum segment length is the maximum continuous heater run with minimal voltage drop. For breaker loading, multiple heater segments can be installed in parallel providing no individual length is longer than the maximum published segment length. For voltages other than 240 Vac, divide full breaker amperage rating by amps/foot @ start-up temperature to determine maximum total footage allowed.*
2. *Circuit breakers are sized per Article 426-4 of the National Electrical Code.*
3. *Article 426-28 of the National Electrical Code requires ground-fault equipment protection for fixed outdoor electrical deicing equipment. Electrical connections should be made by a licensed electrician.*

© March 2019

Type CLT Roof and Gutter Deicer

UL:
Ordinary (Unclassified) Locations

CSA:
Ordinary (Unclassified) Locations

Roof, Gutter Deicer Outline

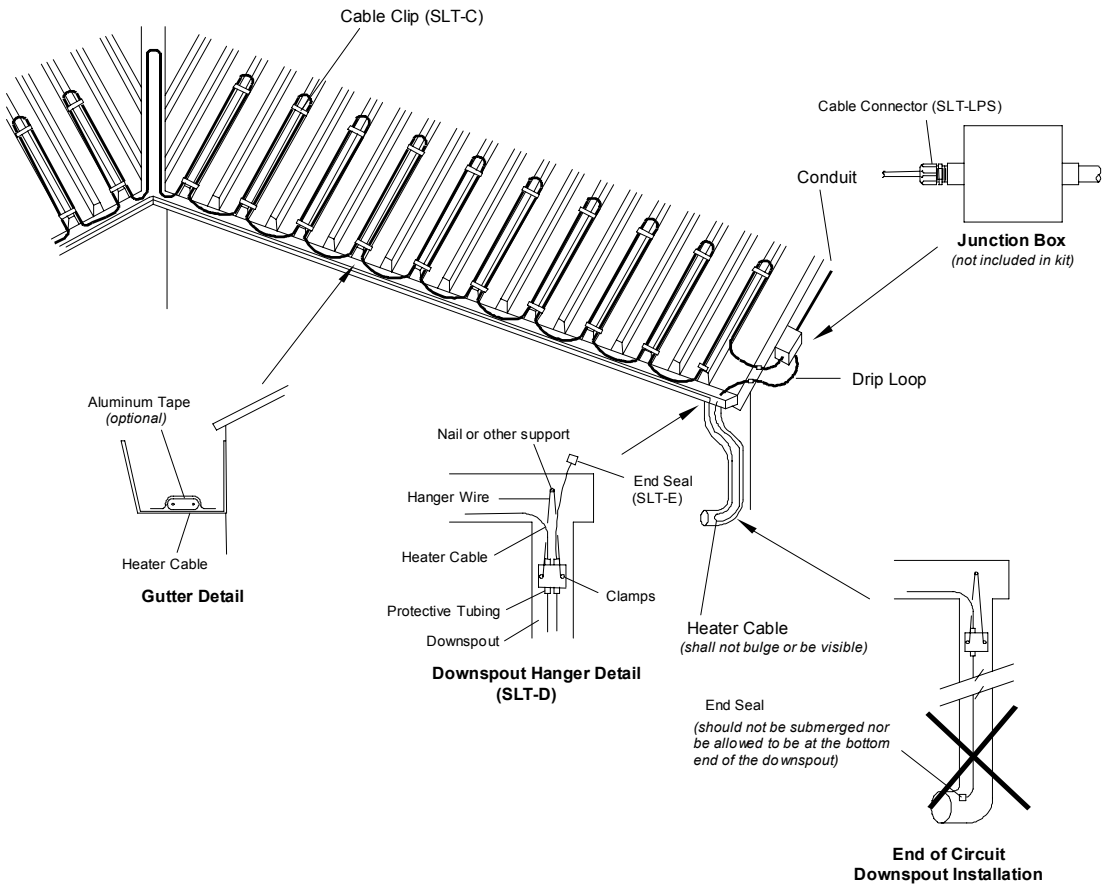

© March 2019

Type SLT Roof and Gutter Deicer

UL:
Ordinary (Unclassified) Locations

CSA:
Ordinary (Unclassified) Locations

Applications

- Nelson Type SLT heating cable provides a solution for ice dams that can build up and damage building roofs, gutters and downspouts.
- During winter months, snow and ice accumulation on roofs can prevent proper drainage of water when normal melting occurs. Water stands on the roof and can be refrozen during cold nights resulting in expansion and potential roof damage.
- Nelson's SLT ice melting heaters are designed for installation on roofs and gutters to melt a pathway for the drainage of water. The heating cable's self-regulating feature provides additional benefits as well.

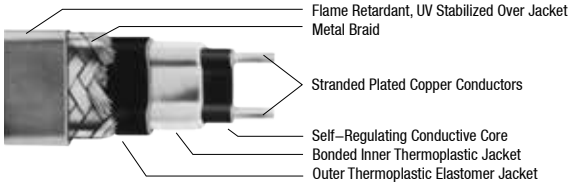

Features

- Nelson SLT heating cable is a parallel circuit, self- regulating electric heater.
- An irradiated cross-linked conductive polymer core is extruded over two multi-stranded, tin-plated, 16-gauge copper buss wires. The conductive core material increases or decreases its heat output in response to temperature changes.
- A waterproof thermoplastic elastomer over jacket is then extruded over the inner jacket for dielectric protection and additional moisture resistance.
- A tinned copper braid is installed over the second jacket providing a continuous ground path.
- A flame retardant, UV stabilized polyolefin over jacket is then extruded over the braid.
- Lower Energy Consumption
  - The heater automatically reduces its power output as drainage tunnels are formed in the ice and snow.
- High Temperature Protection
  - Because the heater self regulates its power output as a function of temperature, it cannot overheat and melt or damage temperature sensitive roof coatings.

Accessories

- SLT-LPS: Power Connection Kit with Cable Seals
- SLT-RC: Roof Clips
- SLT-C: Roof Clips (Universal)
- SLT-D: Downspout Hangers
- SLT-S: Splice Kit – Heat Shrink
- SLT-E: End Termination Cable Seals – Heat Shrink
- AT-50: Aluminum Foil Tape, 50 Yards/Roll

Certifications and Compliances

- UL Listed: E33597
- CSA Standard: C22.2 No. 130-16
- CSA Certified: LR42103
- Other Standard: IEEE 515.1-2012

© March 2019

Type SLT Roof and Gutter Deicer

UL:
Ordinary (Unclassified) Locations

CSA:
Ordinary (Unclassified) Locations

Performance and Rating Data
The total cable length for deicing is determined by including all elements of the roof system that need protection. Use the following tables to determine the total length of cable required.

Total Cable Requirements

Item	Feet of Cable/Ft. Item	Comments
Gutter	0.3 (1.0)	1 Trace/6" gutter width
Downspout	0.6 (2.0)	Unless downspout is on end of circuit, the cable is looped down and back
Roof Valley	1.8 (6.0)	Per valley
Dormer	0.3 (1.0)	1 ft. of cable/foot of dormer perimeter

Cable Footage Required for Roof Overhangs: (Feet of Cable per Foot of Roof)

Eave Overhang	Feet of Cable Loop Height	Shingle Roof	Metal Roof
0.30 (1.0)	0.46 (1.5)	0.56 (1.83)	0.76 (2.50)
0.61 (2.0)	0.76 (2.5)	0.81 (2.67)	1.07 (3.50)
0.91 (3.0)	1.07 (3.5)	1.12 (3.67)	1.37 (4.50)
1.22 (4.0)	1.37 (4.5)	1.42 (4.67)	1.68 (5.50)

Visit our website at www.nelsonheaters.com or contact us at United States: (800) 621-1506 | Europe: +33.3.22.54.13.90.
© March 2019
EMERSON

Type SLT Roof and Gutter Deicer

UL:
Ordinary (Unclassified) Locations

CSA:
Ordinary (Unclassified) Locations

Selection Table

Service Voltage	Power Output in Ice Watts/m (Watts/ft)	Maximum Segment Length m (ft)	Minimum Installation Temperature °C (°F)	Current Load A/m (A/ft) –7°C (20°F) Start–Up	–18°C (0°F) Start–Up	–29°C (–20°F) Start–Up	–40°C (–40°F) Start–Up	Catalog Number
120	40 (12.1)	56 (185)	-37 (-35)	0.554 (0.169)	0.640 (0.195)	0.722 (0.220)	0.804 (0.245)	**SLT-1**
208	31 (9.5)	113 (370)	-37 (-35)	0.220 (0.067)	0.251 (0.077)	0.285 (0.087)	0.319 (0.097)	**SLT-2**
220	34 (10.5)	113 (370)	-37 (-35)	0.243 (0.074)	0.277 (0.084)	0.314 (0.096)	0.351 (0.107)	
240	40 (12.1)	113 (370)	-37 (-35)	0.279 (0.085)	0.318 (0.097)	0.361 (0.110)	0.404 (0.123)	
277	49 (15.0)	107 (350)	-37 (-35)	0.346 (0.105)	0.395 (0.120)	0.448 (0.136)	0.500 (0.153)	

Circuit Breaker Selection

Start–Up Temperature °C (°F)	Max. Length in Meters (Feet) Vs. Circuit Breaker Size 115/120 Vac 15A	20A	30A	208/220 Vac 15A	20A	30A	40A
-7 (20)	27 (90)	37 (120)	53 (175)	53 (175)	72 (235)	108 (355)	143 (470)
-18 (0)	23 (75)	32 (105)	47 (155)	47 (155)	62 (205)	94 (310)	125 (410)
-29 (-20)	21 (70)	27 (90)	41 (135)	41 (135)	55 (180)	84 (275)	111 (365)
-40 (-40)	18 (60)	24 (80)	37 (120)	37 (120)	50 (165)	75 (245)	99 (325)

Notes:

1. *Maximum segment length is the maximum continuous heater run with minimal voltage drop. For breaker loading, multiple heater segments can be installed in parallel providing no individual length is longer than the maximum published segment length. For voltages other than 240Vac, divide full breaker amperage rating by amps/foot @ start-up temperature to determine maximum total footage allowed.*
2. *Circuit breakers are sized per Article 426-4 of the National Electrical Code.*
3. *National Electrical Codes require ground-fault equipment protection for fixed outdoor electrical deicing equipment. Electrical connections should be made by a licensed electrician.*

© March 2019

Type SLT Roof and Gutter Deicer

UL:
Ordinary (Unclassified) Locations

CSA:
Ordinary (Unclassified) Locations

Roof, Gutter Deicer Outline

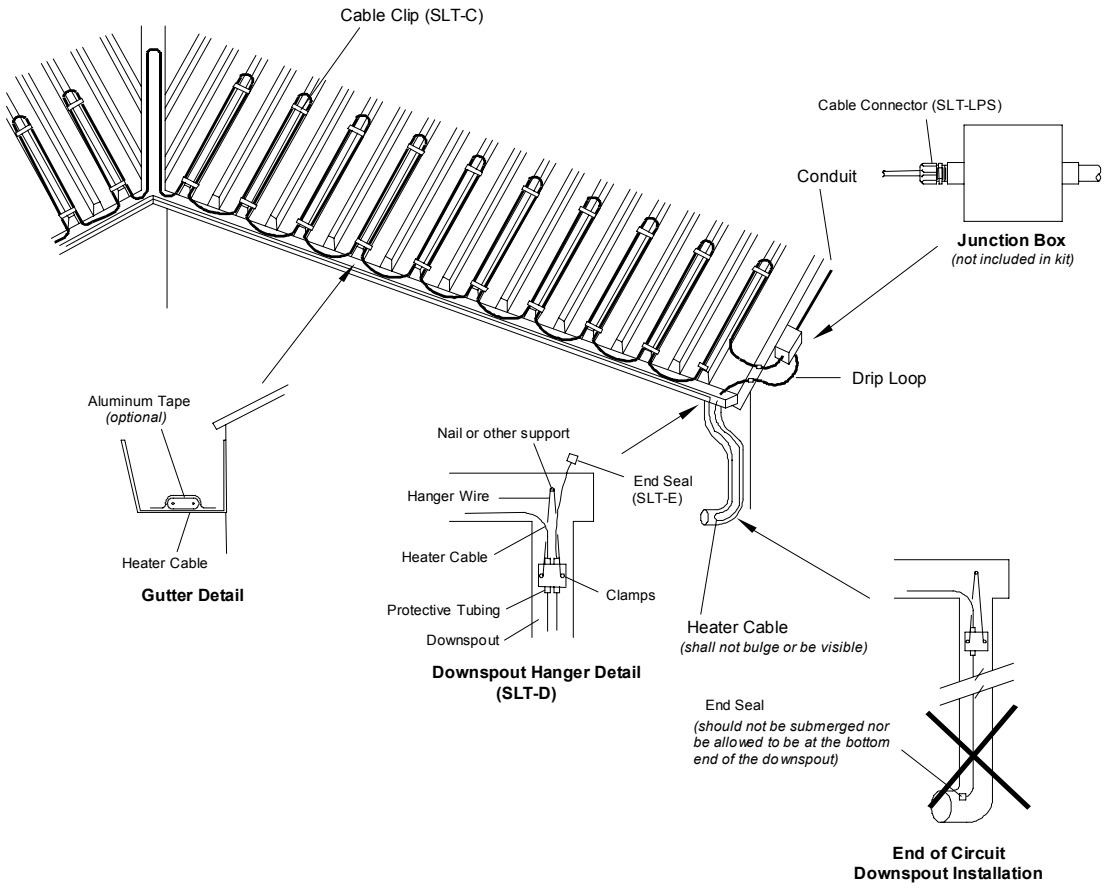

© March 2019

Snow Melting System

UL:
Ordinary (Unclassified) Locations

CSA:
Ordinary (Unclassified) Locations

Application

- Electric heating of paved surfaces such as sidewalks, driveways and parking ramps is an efficient, economical method of preventing snow and ice accumulation.
- Electrical snow melting systems replace older, less efficient means of snow removal such as heated water or oil circulating systems, plowing or shoveling, and offer an effective alternative to the application of salts and other chemicals which result in pavement damage and environmental pollution.

Features

- Mineral insulated cable is a high performance, industrial quality, series resistance heating cable which uses a high temperature metallic conductor as the heating element.
- The conductor is insulated with an inorganic dielectric,
- Magnesium Oxide (Mg0).
- The cable has a corrosion resistant Alloy 825 outer sheath which provides mechanical protection and a ground path.
- Because of the superior performance of MI cable, snow melting designs can use these advantages to reduce the overall cost and improve the reliability of the snow melting system.
- Constant Wattage
  - MI cable provides a series resistance heating system so that the power output is uniform over the entire length of the cable.
  - Parallel, self-regulating heaters develop significant voltage drop over their circuit length which results in reduced power output at the end of the circuit.
- No Inrush
  - MI cable eliminates oversizing of circuit breakers because of cold temperature inrush.
  - Most MI cable does not exhibit cold temperature inrush, and circuit breakers are sized for steady state load.
  - Circuit breakers for parallel, self-regulating heaters must be oversized to compensate for inrush.
- Rugged Sheath
  - MI cables have a rugged, Alloy 825 outer sheath which resists mechanical damage during installation.
  - Parallel, self-regulating heaters have plastic sheaths which are easily damaged during installation.
- High Voltage
  - MI cables can be operated up to 600 volts while parallel, self-regulating heaters are limited to 277 volts.
  - Increased voltage results in longer circuit lengths and fewer circuits.
  - In addition, increased voltage correspondingly reduces amperage for an overall reduction of power distribution costs. And, at higher voltages, the need for step down transformers can be eliminated.
- High Power
  - MI cable can be operated up to 70 watts per foot.
  - Because of the superior performance capabilities of MI cable, power outputs can be increased, which reduces the amount of cable necessary for the required watt density.
  - Parallel, self-regulating cables are limited to 30-35 watts per foot at start-up, which results in narrower spacing and increased heater quantities.
- High Temperature Exposure
  - MI cables can withstand high temperatures, a requirement for installation in asphalt.
  - Parallel, self-regulating heaters are damaged by these temperatures.

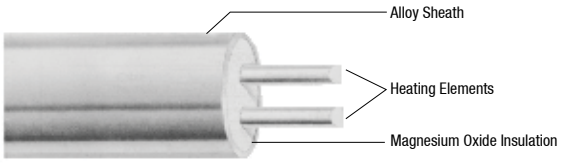

- Conduit Installation
  - MI cables can be installed inside conduit without deration of the heater.
  - No additional cable is required if the cable is installed in conduit.
  - Parallel, self-regulating heater power output must be de-rated as much as 40% if installed in conduit, which increases the amount of cable required.
- Design Options
  - MI cables are available in a wide variety of resistances and with either one or two conductors.
  - More design choices allow the designer to provide the most economical heating solution, taking many design variable into consideration such as circuit length, voltage, and power distribution requirements.
  - Parallel, self-regulating heaters are limited to only one or two cable choices, with few options for design efficiency.

Options

- HC4X50: Contactor, 50 amp, NEMA 4X enclosure
- HC750: Contactor, 50 amp, NEMA 7 enclosure
- JBA: Cast Aluminum junction box, NEMA 4
- SS05: Stainless tie wire
- HCS-3: Clip strip, 3”, 6” or 9” spacing
- HCS-4: Clip strip, 4”, 8” or 12” spacing
- TA4X140: Ambient Thermostat, 15-140°F, NEMA 4X
- SMMC-3: Control Panel
- SMAS: Aerial Sensor
- SMGS: Gutter Sensor
- SMPS: In- ground Sensor
- SS-1: Automatic Snow/Ice Melting Controller

Certifications and Compliances

- UL Listed: E33597
- CSA Standard: C22.2 No. 130-16
- CSA Certified: LR42104
- Other Standard: IEEE 515.1-2012

© March 2019

Snow Melting System

UL:
Ordinary (Unclassified) Locations

CSA:
Ordinary (Unclassified) Locations

MI Cable Design Procedure
For the most economical MI snow melting system, you will want to consider the following design guidelines:

Design Guideline	Benefit
Maximize heater power output	Reduced heater quantity
Maximize heater spacing	Reduced heater quantity
Maximize voltage	Longer circuits, fewer circuits
Minimize amperage	Lower power distribution costs

The following design procedure is based on providing the most economical snow melting system, using the advantages of MI cable. With this approach, cable power output and spacing are maximized.

Term	Units	Description
W	Watts/m^2 (Watts/ft^2)	Desired Watt Density
V	Volts	Cable Voltage
A	M^2 (Ft^2)	Surface Area for One Circuit
a	Amps	Total Circuit Amps
P	Watts/m (Watts/ft)	Cable Power Output
R	Ohms/M (Ohms/Ft)	Cable Resistance
L	Meters (Feet)	Cable Circuit Length
S	Millimeters (Inches)	Cable Spacing

Step 1: Select Desired Watt Density (W)
The ASHRAE "Systems Handbook" classifies snow melting systems as to the urgency for melting.

- Class I (Minimum): Residential walks or driveways and interplant areaways.
- Class II (Moderate): Commercial (stores and offices) sidewalks and driveways, and steps of hospitals.
- Class III (Maximum): Toll plazas of highways and bridges, and aprons and loading areas of airports.

These classifications are based on the allowable rate of snow melting. Actual watt densities required depend on environmental conditions including air temperature, wind speed, snow fall rate, and snow coverage. The data in Figure-1 is taken from the recommendations and calculation methods provided in the ASHRAE handbook, and is intended to allow the designer to exercise some judgment based on risk factors.

Step 2: Select Voltage (V)
Increased voltage reduces amperage and increases circuit length which reduces the overall cost of the snow melting system.

Step 3: Determine Area for Each Heat Tracing Circuit (A)
For large projects, the area corresponding to each heat tracing circuit can be based on maximum circuit amps which are limited by circuit breaker size. The Canadian and National Electrical Codes require the steady state circuit breaker load to be derated to 80% of the nominal circuit breaker rating. For example, the steady state load for a 40 amp breaker would be 80% of 40 or 32 amps. Alternately, a larger area can be divided into smaller zones based on conduit and panel locations or expansion joint bound cries. A typical zone size is 200 square feet.

$$A = \frac{a \times V}{W} \quad \text{EQ-1}$$

$$a = \frac{P \times L}{V} \quad \text{EQ-2}$$

© March 2019

Snow Melting System

UL:
Ordinary (Unclassified) Locations

CSA:
Ordinary (Unclassified) Locations

Figure 1: Electric Snow Melting System Design Data

	Common Watt Densities Actually Installed Watts/m² (Watts/ft²)		
Location	**Class I**	**Class II**	**Class III**
Calgary, AB	485 (45)	592 (55)	700 (65)
Edmonton, AB	538 (50)	646 (60)	754 (70)
Little Rock, AR	215 (20)	323 (30)	538 (50)
Denver, CO	452 (42)	538 (50)	646 (60)
Wilmington, DE	323 (30)	431 (40)	538 (50)
District of Columbia	323- 431 (30-40)	431-592 (40-55)	592-646 (55-60)
Mt. Home, ID	226 (21)	398 (37)	614 (57)
Chicago, IL	431 (40)	538 (50)	646 (60)
Indianapolis, IN	431 (40)	431 (40)	431-646 (40-60)
Dubuque, IA	431 (40)	431-646 (40-60)	646 (60)
Kansas City, KS	431 (40)	538 (50)	646 (60)
Ashland, KY	323 (30)	452 (42)	646 (50)
Bangor, ME	431 (40)	431 (40)	646 (60)
Baltimore, MD	323-485 (30-45)	538-646 (50-60)	646-807 (60-75)
Boston, MA	431-538 (40-50)	538-646 (50-60)	646-807 (60-75)
Detroit, MI	431-646 (40-60)	646 (60)	646 (60)
Minneapolis, MN	452 (42)	646-807 (60-75)	754-807 (70-75)
St. Louis, MO	431 (40)	431-646 (40-60)	646 (60)
Winnipeg, MB	431 (40)	538 (50)	646 (60)
Moncton, NB	377 (35)	485 (45)	592 (55)
Omaha, NE	431-485 (40-45)	646 (60)	646 (60)
Concord, NH	538 (50)	538 (50)	6.97 (75)
Atlantic City, NJ	323 (30)	431 (40)	646 (60)
New York, NY	377-431 (35-40)	431-538 (40-50)	538-646 (50-60)
Syracuse, NY	431-646 (40-60)	646 (60)	646 (60)
Charlotte, NC	452 (42)	323-452 (30-42)	452 (42)
Cincinnati, OH	431 (40)	538 (50)	646 (60)
Cleveland, OH	431 (40)	485 (45)	485-592 (45-55)
Ottawa, ON	485 (45)	592 (55)	700 (65)
Toronto, ON	377 (35)	485 (45)	592 (55)
Tulsa, OK	215 (20)	323 (30)	431 (40)
Montreal, PQ	485 (45)	646 (60)	646 (60)
Regina, SK	485 (45)	646 (60)	646 (60)

© March 2019

UL:
Ordinary (Unclassified) Locations

CSA:
Ordinary (Unclassified) Locations

Step 4: Determine Maximum Cable Power Output (P)
Normally, you will want to maximize cable power output to minimize the amount of cable required. MI power outputs are limited by the pavement type and installation methods.

Pavement Type	Maximum Cable Output (P) Watts/m (Watts/ft)
Asphalt	50 (15)
Concrete Heater 50 mm (2 in) deep	130 (40)
Concrete Heater 150 mm (3 in) deep	165 (50)
Concrete Heater 200 mm (4 in) deep	200 (60)
Concrete Heater 250 mm (5 in) deep	230 (70)

Step 5: Determine Cable Circuit Length (L)
Cable circuit length in feet is given by the equation:

$$L = \frac{A \times W}{P} \qquad \text{EQ-3}$$

Step 6: Determine Cable Spacing (S)
Cable spacing in inches (S) is given by the equation:

$$S = \frac{A}{L} \times 12 \qquad \text{EQ-4}$$

Step 7: Determine Cable Resistance (R)
Cable resistance in ohms/foot (R) is given by the equation:

$$R = \frac{V^2}{L^2 \times P} \qquad \text{EQ-5}$$

Step 8: Select Cable
Use Figure-2 to select the correct cable based on cable resistance and the desired number of conductors. When there is no corresponding cable with the exact resistance calculated in Step 7, select the cable with the resistance nearest to the calculated number. Selecting a cable with a higher resistance will decrease power output with the same circuit length while selecting a cable with a lower resistance will increase power output with the same circuit length.

Figure 2: MI Custom Cable Resistance Characteristics - Cable Installed In Concrete

2–Conductor Cable 0.3125" Diameter Alloy, 600 Volts		
	Cable Resistance ohms/m (ohms/ft)	
Cable Number	Heating Design @ 3°C (38°F) Operating	Breaker Design @ –18°C (0°F) Operating
588B	0.0218 (0.0066)	0.0198 (0.0060)
614B	0.0457 (0.0139)	0.0416 (0.0127)
627B	0.0867 (0.0264)	0.0842 (0.0257)
640B	0.1301 (0.0397)	0.1288 (0.0392)
670B	0.2118 (0.0646)	0.2100 (0.0640)
710B	0.3390 (0.1033)	0.3361 (0.1024)
715B	0.5299 (0.1615)	0.5279 (0.1609)
720B	0.6706 (0.2044)	0.6680 (0.2036)
732B	1.0631 (0.3240)	1.0591 (0.3228)
750B	1.6375 (0.4991)	1.6337 (0.4979)
774B	2.4071 (0.7337)	2.4015 (0.7319)
810B	5.3055 (1.6170)	5.2932 (1.6133)
819B	6.1242 (1.8666)	6.1100 (1.8622)
830B	9.7267 (2.9646)	9.7041 (2.9577)
840B	14.0825 (4.2921)	14.0497 (4.2821)
859B	19.2897 (5.8792)	19.2449 (5.8655)

© March 2019

UL:
Ordinary (Unclassified) Locations

CSA:
Ordinary (Unclassified) Locations

Figure 2: MI Custom Cable Resistance Characteristics - Cable Installed In Concrete

2–Conductor Cable 0.1875" Diameter Alloy, 300 Volts		
	Cable Resistance ohms/m (ohms/ft)	
Cable Number	Heating Design @ 3°C (38°F) Operating	Breaker Design @ –18°C (0°F) Operating
556K	0.1319 (0.0402)	0.1202 (0.0366)
658K	0.1782 (0.0543)	0.1624 (0.0495)
674K	0.2275 (0.0693)	0.2073 (0.0632)
693K	0.2839 (0.0865)	0.2588 (0.0789)
712K	0.3588 (0.1093)	0.3269 (0.0996)
715K	0.4507 (0.1374)	0.4108 (0.1252)
721K	0.6934 (0.2113)	0.6860 (0.2091)
722K	0.6433 (0.1961)	0.5725 (0.1745)
732K	1.0397 (0.3169)	1.0308 (0.3142)
742K	1.3558 (0.4132)	1.3443 (0.4097)
752K	1.6948 (0.5165)	1.6804 (0.5122)
766K	2.1510 (0.6556)	2.1328 (0.6500)
774K	2.4207 (0.7378)	2.4114 (0.7350)
783K	2.7151 (0.8275)	2.7047 (0.8244)
810K	3.2712 (0.9970)	3.2587 (0.9932)
813K	4.2525 (1.2961)	4.2363 (1.2912)
818K	5.8881 (1.7946)	5.8657 (1.7878)
824K	7.6545 (2.3330)	7.6254 (2.3241)
830K	9.6940 (2.9546)	9.6714 (2.9477)
838K	12.1175 (3.6932)	12.0893 (3.6846)
846K	15.4580 (4.7114)	15.4220 (4.7004)
860K	18.3399 (5.5897)	18.2973 (5.5768)
866K	21.6149 (6.5879)	21.5647 (6.5726)
894K	29.4749 (8.9835)	29.4064 (8.9626)
919K	58.9498 (17.9670)	58.8128 (17.9253)

© March 2019

UL:
Ordinary (Unclassified) Locations

CSA:
Ordinary (Unclassified) Locations

Figure 2: MI Custom Cable Resistance Characteristics - Cable Installed In Concrete

2–Conductor Cable 0.1875" Diameter Alloy, 600 Volts		
	Cable Resistance ohms/m (ohms/ft)	
Cable Number	Heating Design @ 3°C (38°F) Operating	Breaker Design @ –18°C (0°F) Operating
145K	0.0141 (0.0043)	0.0129 (0.0039)
189K	0.0276 (0.0084)	0.0251 (0.0077)
216K	0.0530 (0.0161)	0.0515 (0.0157)
239K	0.1271 (0.0387)	0.1260 (0.0384)
250K	0.1630 (0.0497)	0.1616 (0.0492)
279K	0.2575 (0.0785)	0.2553 (0.0778)
310K	0.3108 (0.0947)	0.3096 (0.0944)
316K	0.5136 (0.1565)	0.5116 (0.1559)
326K	0.8505 (0.2592)	0.8473 (0.2582)
333K	1.0795 (0.3290)	1.0754 (0.3278)
346K	1.4949 (0.4556)	1.4892 (0.4539)
372K	2.3907 (0.7287)	2.3852 (0.7270)
412K	3.8317 (1.1679)	3.8228 (1.1651)
415K	4.8470 (1.4773)	4.8357 (1.4739)
423K	7.7290 (2.3557)	7.7110 (2.3502)
430K	9.1700 (2.7949)	9.1487 (2.7884)
447K	14.7375 (4.4918)	14.7032 (4.4813)

Step 9: Finalize Design (continued)
Actual heater length in feet is given by Equation-6, where R is the actual resistance of the selected cable from Figure 2. The same equation can be used to fine-tune both the power output of the cable and circuit length:

$$L = \frac{V}{\sqrt{P \times R}} \quad \text{EQ-6}$$

Total circuit breaker load (a) in amps can be calculated from Equation-2 using the cable resistance given for circuit breaker sizing in Figure-2 as noted. Heater spacing is determined from Equation-4. Cable sheath temperature is determined from Figure-3.

Step 10: Specify Heater
MI cable is specified as per Catalog Ordering System.

© March 2019

UL:
Ordinary (Unclassified) Locations

CSA:
Ordinary (Unclassified) Locations

Figure 3: MI Cable Sheath Temperature In Concrete

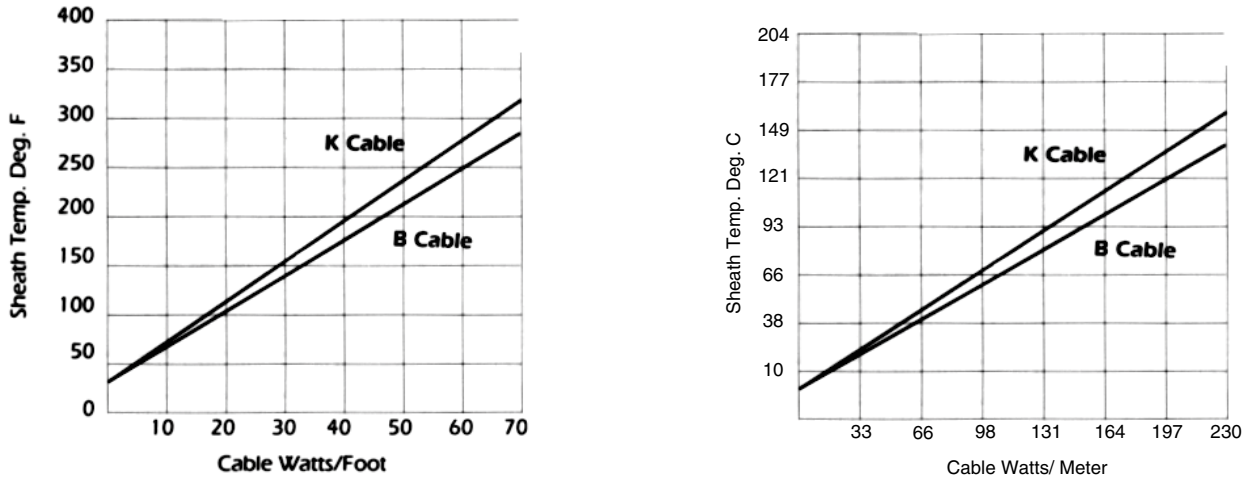

Note: Based on ambient temp of -1° C (30° F). Upper surface temperature of concrete will be approximately 0.56°C (1.0°F) above ambient temperature for each cable W/m (W/ft).

Catalog Numbering Guide

(*)	A	670	150	07	(*)
Optional Construction Prefix P - Pulling Eye for A Form only X - Oversize cold sections or special feature requirement	Form A or E from table	Conductor selection from table	Hot section length in Meters (Feet)	Cold section Length(s) order in Meters (Feet)	Optional Construction Suffix UM - UL Snow Melting Listing tag ①

① *Requires volts, amps and watts with each cable order.*

© March 2019

SMMC–3 Control Panel

Multi Sensor Snow/Ice Melting Controller

cULus:
Ordinary Locations

Applications

- The SMMC-3 Control Panel manages snow and ice melting systems for sidewalks, driveways, gutters and downspouts. Suitable for controlling all types of heating cable systems, the SMMC-3 can monitor snow and ice accumulation in three separate zones.
- The SMMC-3 programming allows each zone to be controlled independently or on a priority mode basis.
- The SMMC-3 is housed in an enclosure suitable for commercial/industrial applications (NEMA 12) and features an LCD display, programming and associated indicator lights for operation of each zone.
- The control signal relays operate external contactors.



Features

- Automatic snow/ice melting control
- Manual zone activation
- Hold on Time: Adjustable 0-10 hours in half-hour increments
- Maximizes energy efficiency
- Monitors and controls 3 separate zones, sequentially or independently
- Reduced power requirements when priority operation mode is used
- Power Requirements: 120 Vac, 450 VA
- System Memory: Non-volatile: no data loss with a loss of system power
- Control Relays: 120 Vac, 1 Amp contacts
- Manual Bypass: Manually cycles from 0-10 hours in half-hour increments
- Ambient Operating Temperature Range: -20°C to +70°C (-4°F to +160°F)
- Storage Temperature: -20°C to +85°C (-4°F to +185°F)
- Relative Humidity: 0 to 90% RH, non condensing
- Mechanical: NEMA 12 non-metallic enclosure
- Dimensions: 12.375” W x 10.25” H x 4.75” D
- Operating Modes:
  - Mode 1 – Independent
    - Programmable for 3 independent snow melting systems (zones) for any combination of snow/ice melting or roof, Gutter de-icing systems
    - Controlling any combination
  - Mode 2 – Priority
    - Sequentially operating 3 snow melting zones with individual zone priority level of 1 to 3
    - With one in-ground sensor per zone and an optional Aerial Moisture sensor for priority zone 1

Certifications and Compliances

- UL Standard: UL 873 Temperature-Indicating and -Regulating Equipment
- CSA Standard: CSA C22.2 No. 24-93 Temperature-Indicating and -Regulating Equipment Certified for Canada

© March 2019

SMMC–3 Control Panel

Multi Sensor Snow/Ice Melting Controller

cULus:
Ordinary Locations

Sensors for SMMC-3
The SMMC-3 can access information from three different types of moisture sensors - surface (SMPS-1), aerial (SMAS-1) and gutter (SMGS-1) and one type of temperature sensor (SMTS-1). The surface, aerial and gutter sensors detect moisture from snow, ice, sleet, etc. and send appropriate signals to the SMMC-3. Similarly, the temperature sensor sends temperature data back to the SMMC-3. Independent temperature and moisture information is processed by the SMMC-3 to ensure that heating equipment will only be energized when precipitation occurs during freezing conditions. For each of the SMMC-3 control zones, up to two individual moisture sensors can be connected. However, for each zone only one of these may be a surface sensor. Each SMMC-3 must have a temperature sensor, SMTS-1, in order to function. The SMTS-1 is included with each SMMC-3.

SMMC-3 *Installation & Operating Instructions*

Sample Application Illustration

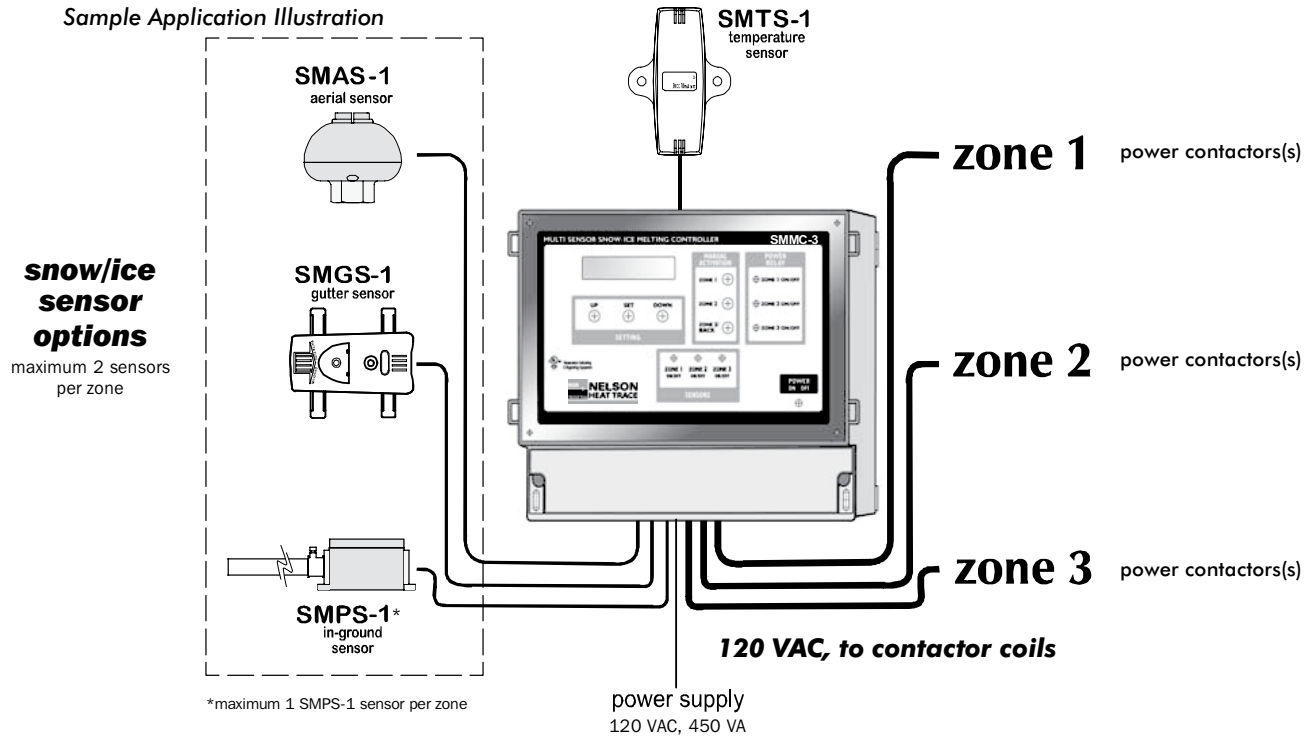

© March 2019

SMTS–1 Temperature Sensor

Multi Sensor Snow/Ice Melting Controller

cULus:
Ordinary Locations

Applications

- The SMTS-1 sensor measures temperatures and is placed in the area that best represents the outdoor temperature conditions.
- Each SMMC-3 includes a SMTS-1 temperature sensor.



Features

- The SMTS-1 operates on low voltage provided by the SMMC-3 Control Panel and allows the SMMC-3 to determine when to activate snow-melting or de-icing equipment.
- Easily affixed to a wall or fascia by two screws, the SMTS-1's small size and neutral color allows the sensor to discreetly blend with almost any background.
- Supplied with 3 m (10 ft) of connection wire which may be extended up to 152.4 m (500 ft) with an appropriately rated 18-20 AWG 3-wire unshielded cable.
- Working temperature: -40°C to +65°C (-40°F to +150°F)
- Storage temperature: -45°C to +70°C (-49°F to +160°F)
- Relative Humidity: 0 to 100%
- Power supply voltage: 5 Vac
- Maximum amperage: 10mA

Certifications and Compliances

- UL Standard: UL 873 Temperature-Indicating and -Regulating Equipment
- CSA Standard: CSA C22.2 No. 24-93 Temperature-Indicating and -Regulating Equipment Certified for Canada

Outline

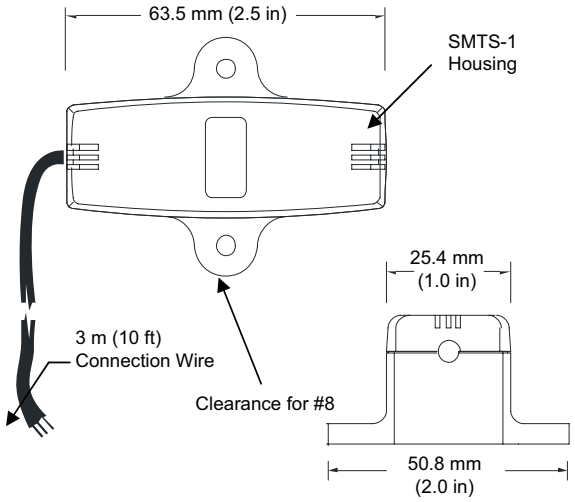

© March 2019

SMAS–1 Aerial Moisture Sensor

Multi Sensor Snow/Ice Melting Controller

cULus:
Ordinary Locations

Applications

- The SMAS-1 Aerial Moisture sensor detects falling or blowing snow coming in contact with the sensor grid, then sends a signal to the SMMC-3 Control Panel to energize heating equipment (snow melting or de-icing cables, etc.).



Features

- The sensor operates on low voltage supplied by the SMMC-3 Control Panel and has a built in ½" NPT conduit connection and includes 3 m (10 ft) of wire for connection back to the SMMC-3.
- The SMAS-1 is well suited for mast mounting and custom positioning.
  - Rounded features and neutral color allows the sensor to discreetly blend into almost any environment.
- Supplied with 3 m (10 ft) of connection wire which may be extended up to 152.4 m (500 ft) with an appropriately rated 18-20 AWG 3-wire unshielded cable.
- Working temperature: -40°C to +70°C (-40°F to +160°F)
- Storage temperature: -40°C to +70°C (-40°F to +160°F)
- Relative Humidity: 0 to 100%
- Power supply voltage: 25 Vac
- Maximum amperage: 500mA

Certifications and Compliances

- UL Standard: UL 873 Temperature-Indicating and -Regulating Equipment
- CSA Standard: CSA C22.2 No. 24-93 Temperature-Indicating and -Regulating Equipment Certified for Canada

Outline

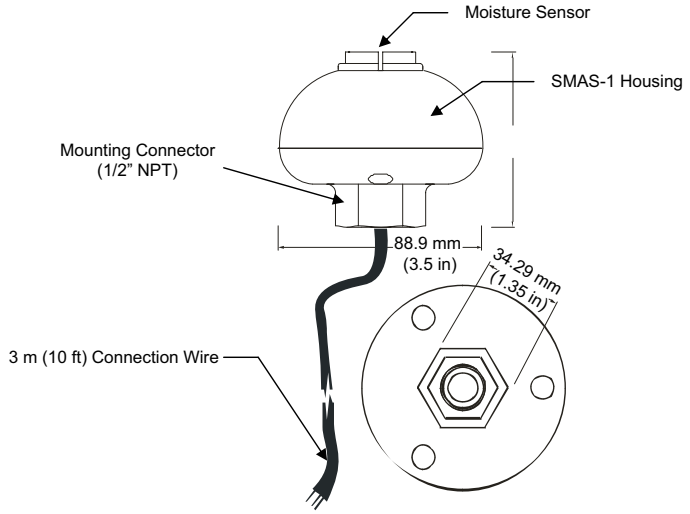

© March 2019

SMPS–1 In–Ground Sensor

Multi Sensor Snow/Ice Melting Controller

cULus:
Ordinary Locations

Applications

- The SMPS-1 In-Ground Sensor is encased within a rugged enclosure and is intended to be embedded within the surface being heated, usually concrete or asphalt.

Features

- The SMPS-1 is supplied with a protective field cover to simplify asphalt or concrete installations and comes with 9 m (30 ft) of wire for connection back to the SMMC-3 Control Panel.
- The low voltage SMPS-1 senses falling or drifting snow by melting it on the grid area of the sensor and then detecting the presence of moisture by measuring an electrical signal between the grid bars.
- The SMPS-1 also measures the temperature of the surface. This dual sensing technique allows the SMMC-3 to control the heating equipment (snow melting, de-icing cables, etc.) in the most efficient manner possible. This assures minimum energy costs while still providing reliable surface snow detection.
- The sensor enclosure is provided with a ½" NPT conduit connection.
- Connection wire may be extended up to 152.4 m (500 ft) with an appropriately rated 18-20 AWG 4-wire shielded cable.
- Working temperature: -40°C to +70°C (-40°F to +160°F)
- Storage temperature: -40°C to +70°C (-40°F to +160°F)
- Relative Humidity: 0 to 100%
- Power supply voltage: 24 Vac
- Maximum amperage: 500mA

Certifications and Compliances

- UL Standard: UL 873 Temperature-Indicating and -Regulating Equipment
- CSA Standard: CSA C22.2 No. 24-93 Temperature-Indicating and -Regulating Equipment Certified for Canada



Outline

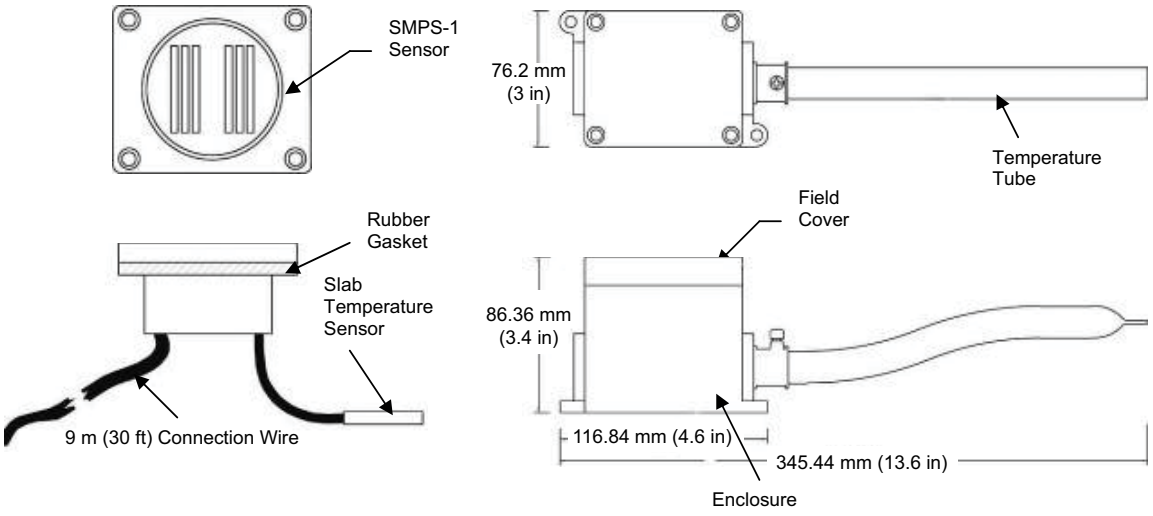

© March 2019

SMGS–1 Gutter Sensor

Multi Sensor Snow/Ice Melting Controller

cULus:
Ordinary Locations

Applications

- The SMGS-1 Gutter Moisture Sensor detects moisture on roofs and in gutters.



Features

- Roof moisture detection is made with the unique sensor wire design; gutter moisture detection is made by the traditional sensing grid on the bottom of the SMGS-1 housing.
- The SMGS-1 housing sits directly in the gutter and the sensor wire is secured to the roof.
- The combination roof, Gutter detection system provides quick detection of potentially damaging roof, Gutter icing conditions. As soon as moisture is detected, the SMGS-1 sends a signal to the SMMC-3 to energize de-icing cables.
- The SMGS-1 Sensor operates on low voltage provided by the SMMC-3 Control Panel and includes 3 m (10 ft) of wire for connection back to the SMMC-3 as well as mounting hardware.
- Connection wire may be extended up to 152.4 m (500 ft) with an appropriately rated 18-20 AWG 3-wire unshielded cable.
- Working temperature: -40°C to +70°C (-40°F to +160°F)
- Storage temperature: -40°C to +70°C (-40°F to +160°F)
- Relative Humidity: 0 to 100%
- Power supply voltage: 24 Vac
- Maximum amperage: 500mA

Certifications and Compliances

- UL Standard: UL 873 Temperature-Indicating and -Regulating Equipment
- CSA Standard: CSA C22.2 No. 24-93 Temperature-Indicating and -Regulating Equipment Certified for Canada

Outline

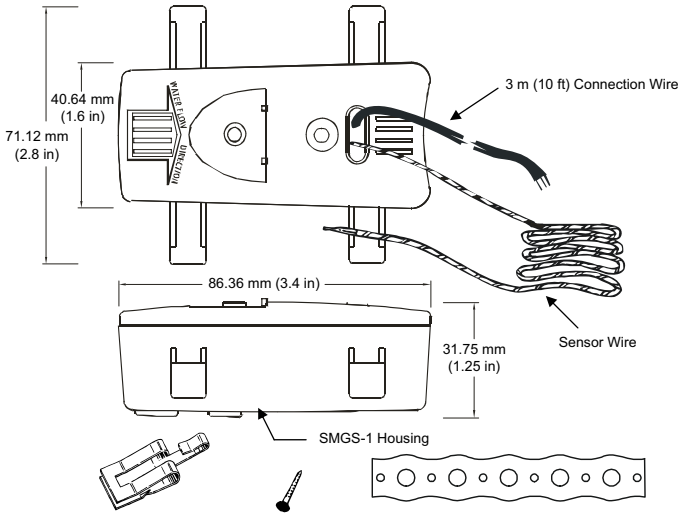

© March 2019

SS–1 Automatic Snow/Ice Melting Controller

cULus:
Ordinary Locations

Applications

- The SS-1 Automatic Snow Controller has been designed and manufactured for the sole intended use of controlling heating cables in residential and commercial snow melting applications such as: sidewalks, driveways, parking garage entrances, etc.



Features

- The SS-1 uses microprocessor technology to reduce energy consumption by energizing the heating cable only when the right conditions of temperature and snowfall occur.
- The snow and temperature sensors detect snow or ice conditions and activate, through a power relay, the heating system.
- Supplied with a LED indicator light.
  - This light switches on and turns red if the snow sensor is dirty and needs to be cleaned. This red LED light will switch off automatically when the snow sensor is cleaned.
  - The LED light turns green every time the power relay is activated and will switch off if the power relay is off.
- Operating temperature: +3°C (+38°F +/-1°F)
- Power switch OFF temperature +45°C (+112°F)
- Power switch ON temperature +30°C (+86°F)
- Working temperature:-40°C to +65°C (-40°F to +150°F)
- Storage temperature: -45°C to +70°C (-49°F to +160°F)
- Relative Humidity: 0 to 100%
- Power supply voltage: 120 Vac
- Frequency: 50/60 Hz
- Maximum power consumption: 60W
- Output type: 16A Relay at 250 Vac

Certifications and Compliances

- UL Standard: UL 873 Temperature-Indicating and -Regulating Equipment
- CSA Standard: CSA C22.2 No. 24-93 Temperature-Indicating and -Regulating Equipment Certified for Canada

Outline

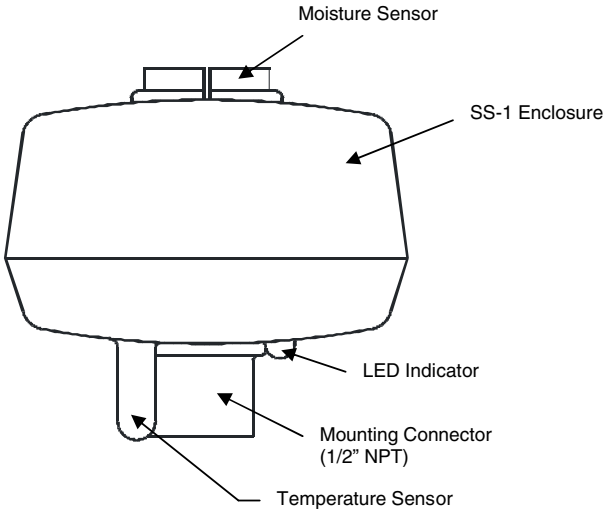

© March 2019

Type LT Domestic Hot Water Temperature Maintenance System

UL:
Rated for Ordinary (Unclassified) Locations

Applications

- Nelson Type LT domestic hot water heating cable is an energy-efficient and economical alternative to common recirculation systems.
- The heating cable is used to maintain water temperature in the supply piping system, reducing or eliminating the delay in obtaining hot water at each fixture.
- This cable system eliminates the need for return piping, pumps, check valves and pressure balancing valves found in recirculating systems.
- In addition, maintenance requirements are greatly reduced through the elimination of all devices with moving parts connected to the recirculating portion of the hot water supply system.
- The standard product offering has been designed to maintain nominal domestic water temperatures of 105ºF, 115ºF, 125ºF and 140ºF.
- These representative hot water temperatures are in accordance with the ASHRAE Applications Handbook, Service Water Heating.
- The heating cables are UL Listed for domestic hot water temperature maintenance and meet all requirements of IEEE Standard 515.1, Recommended Practice for the Testing, Design, Installation, and Maintenance of Electrical Resistance Heat Tracing for Commercial Applications

Features

- Nelson Type LT self-regulating heater cable is a parallel circuit electric heater strip.
- An irradiation cross-linked conductive polymer core material is extruded over the multi-stranded, tin-plated, 16-gauge copper bus wires.
- The conductive core material increases or decreases its heat output in response to temperature changes.
- Two jackets provide extra dielectric strength, moisture resistance, and protection from impact and abrasion damage. The inner thermoplastic jacket is extruded over and bonded to the core material.
- A thermoplastic elastomer over jacket is then extruded over the inner jacket.
- A stranded tinned copper metal braid is supplied on all heaters. A color-coded modified polyolefin over jacket is supplied for positive identification during installation.

Operating Principle

- The parallel bus wires apply voltage along the entire length of the heater cable.
- The conductive core provides an infinite number of parallel conductive paths permitting the cable to be cut to any length in the field with no dead or cold zones developing.
- The heater cable derives its self-regulating characteristic from the inherent properties of the conductive core material.
- As the core material temperature increases, the number of conductive paths in the core material decrease, automatically decreasing the heat output.
- As the temperature decreases, the number of conductive paths increase, causing the heat output to increase.
- This occurs at every point along the length of the cable, adjusting the power output to the varying conditions along the pipe.
- The self-regulating effect allows the cable to be overlapped without creating hot spots or burnout.

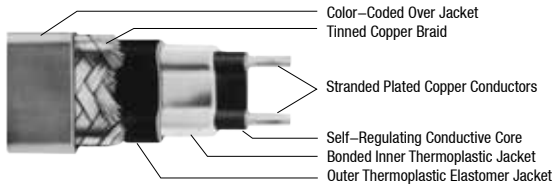

- As the cable self-regulates its heat output, it provides for the efficient use of electric power, producing heat only when and where it is needed.

Certifications and Compliances

- UL Listed: E53501
- Other Standard: IEEE 515.1-2012

Options

- Connection Kits for Power Connection, Tee Splice, Splices and End Seals (Nelson PLT Series)
- Thermostatic Controls (Nelson TH and HC Series) Junction Boxes, Tapes and Warning Signs Custom Control, Monitoring and Power Panels

© March 2019

Type LT Domestic Hot Water Temperature Maintenance System

UL:
Rated for Ordinary (Unclassified) Locations

Selection Table

Service Voltage	Maximum Segment Length m (ft)	Nominal Maintenance Temperature °C (°F)	Ambient Temperature Range °C (°F)	Color Code	Catalog Number
208	246.9 (810.0)	41 (105)	23-26 (74-79)	Blue	**LT-A**
208	234.7 (770.0)	46 (115)	21-26 (70-78)	Green	**LT-B**
208	219.5 (720.0)	52 (125)	21-26 (70-78)	Yellow	**LT-C**
208	217.9 (715.0)	60 (140)	21-26 (70-78)	Red	**LT-D**
120	100.6 (330.0)	52 (125)	21-26 (70-78)	Purple	**LT-C1**

Notes

1. *The Nelson Domestic Hot Water Temperature Maintenance System has been designed to provide nominal pipe temperatures under specific conditions. Due to variations in sealing techniques, operating environment, installation methods, etc., exact temperatures cannot be assured without thermostatic control. This is recommended in applications where critical temperature tolerances are required.*
2. *If the specified installation does not comply with published application values, please consult your authorized factory representative. Product is designed for applications on copper supply piping with standard fiberglass insulation of the thickness noted in the Product Selection Tables. Contact your Nelson representative if using other types of insulation.*

Circuit Breaker Selection

Start–Up Temp. °C (°F)	Service Voltage	Maximum Length in Meters (Feet) Vs. Circuit Breaker Size 120 Vac 15A	20A	30A	40A	Cable Type
10 (50)	208	247 (810)	329 (1080)	494 (1620)	658 (2160)	LT-A
10 (50)	208	157 (515)	209 (685)	314 (1030)	418 (1370)	LT-B
10 (50)	208	104 (340)	137 (450)	207 (680)	276 (905)	LT-C
10 (50)	208	87 (285)	116 (380)	174 (570)	232 (760)	LT-D
10 (50)	120	70 (230)	93 (305)	140 (460)	186 (610)	LT-C1

Notes

1. *Maximum segment length is the maximum continuous heater run with minimal voltage drop. For breaker loading, multiple heater segments can be installed in parallel providing no individual length is longer than the maximum segment length.*
2. *Circuit breakers are sized per North American electrical codes.*
3. *When using 2 or more heater cables of different ratings in parallel on a single circuit breaker, use the 15A column amperage of 15 amps, divide it by the maximum footage to arrive at an amps/foot figure for each cable. You can then calculate circuit breaker sizes for these combination loads. These amps/foot factors include the sizing factors required by North American electrical codes.*
4. *North American electrical codes require ground-fault equipment protection for each branch circuit supplying electric pipe heating equipment.*

Visit our website at www.nelsonheaters.com or contact us at United States: (800) 621-1506 | Europe: +33.3.22.54.13.90.
© March 2019
EMERSON

UL:
Rated for Ordinary (Unclassified) Locations

+41°C (+105°F) Hot Water System LT-A @ 208V

Insulation Thickness ① Millimeters (Inches)	Copper Pipe Diameter (IPS) in Inches										
	½	¾	1	1–¼	1–½	2	2–½	3	4	5	6
12 (0.5)	X	X	X	X	X						
25 (1.0)					X	X	X	X			
38 (1.5)							X	X	X	X	
50 (2.0)									X	X	X

+46°C (+115°F) Hot Water System LT-B @ 208V

Insulation Thickness ① Millimeters (Inches)	Copper Pipe Diameter (IPS) in Inches										
	½	¾	1	1–¼	1–½	2	2–½	3	4	5	6
12 (0.5)	X	X	X	X							
25 (1.0)				X	X	X	X				
38 (1.5)						X	X	X	X		
50 (2.0)							X	X	X	X	X

+52°C (+125°F) Hot Water System LT-C @ 208V

Insulation Thickness ① Millimeters (Inches)	Copper Pipe Diameter (IPS) in Inches										
	½	¾	1	1–¼	1–½	2	2–½	3	4	5	6
12 (0.5)	X	X	X	X							
25 (1.0)				X	X	X	X				
38 (1.5)						X	X	X	X		
50 (2.0)							X	X	X	X	X

+60°C (+140°F) Hot Water System @ 208V

Insulation Thickness ① Millimeters (Inches)	Copper Pipe Diameter (IPS) in Inches										
	½	¾	1	1–¼	1–½	2	2–½	3	4	5	6
12 (0.5)	X	X									
25 (1.0)		X	X	X	X						
38 (1.5)				X	X	X	X				
50 (2.0)						X	X	X	X	X	X

52°C (125°F) Hot Water System LT-C1 @ 120V

Insulation Thickness ① Millimeters (Inches)	Copper Pipe Diameter (IPS) in Inches										
	½	¾	1	1–¼	1–½	2	2–½	3	4	5	6
12 (0.5)	X	X	X								
25 (1.0)			X	X	X	X					
38 (1.5)					X	X	X	X			
50 (2.0)							X	X	X	X	X

① *Fiberglass Insulation*

© March 2019

PLT–Series Connection Kits and Accessories

Domestic Hot Water Temperature Maintenance System

UL:
Rated for Ordinary (Unclassified) Locations

Application

- Nelson PLT Series connection kits and accessories is Underwriter's Laboratory approved for use in domestic hot water supplemental heating systems when used with approved Nelson heating cables.
- The PLT-LP and PLT-LPS connection kits allow maximum versatility to the installer by interfacing with commonly used electrical and/or construction materials.

Features

- The PLT-LP Connection Kit is suitable for connecting up to two heating cables to customer supplied power wiring or as an in-line splice configuration utilizing a customer supplied junction box.1 Refer to the selection table for the proper specifying of the complete kit assembly. (Example: PLT-LP-J).
  - Kit Contents:
    - 1 Universal Base, Box Adapter, Sealing Gasket and Locknut
    - 1 Sealing Grommet
- The PLT-LPS Connection Kit is suitable for connecting up to two heating cables to customer supplied power wiring or as an in-line splice configuration utilizing a customer supplied junction box.①
  - This kit differs from the PLT-LP in that it also contains shrink tube cable terminations. Refer to the selection table for the proper specifying of the complete kit assembly. (Example: PLT-LPS-J).
  - Kit Contents:
    - 1 Universal Base, Box Adapter, Sealing Gasket and Locknut
    - 1 Sealing Grommet
    - 1 Power Termination and Cable End Seal
    - 1 Ground Connection Splice ②

Options

- Heat Shrinkable Terminations
  - LT-SP Heat-Shrinkable Power End Termination Kit
    - Used for terminating field-fabricated heater cables inside the power connection box.
    - Each kit makes 5 complete terminations.
  - LT-SE Heat-Shrinkable End Seal Termination Kit
    - Used for terminating the ends of field-fabricated heater cables.
    - Each kit makes 5 complete terminations.
- Heat Shrinkable Splices:
  - LT-SS Heat-Shrinkable In-Line Splice Connection Kit
    - Used for splicing 2 cables under the insulation.
    - Each kit makes 5 complete assemblies.
  - LT-ST Heat-Shrinkable Tee-Splice Connection Kit
    - Used for splicing 3 cables under the insulation.
    - Each kit makes 5 complete assemblies.
- Pipe Clamps:
  - PC-03 (3.0" Diameter and below)
  - PC-12 (3.5" – 12.0" Diameter)
  - PC-20 (12.5" – 20.0" Diameter)
    - Pipe Clamps, stainless steel.
    - Used to attach connection kits to pipe.



PLT–LP



PLT–LPS

- Junction Box
  - JB552 Non-Metallic Junction Box, 5" x 5" x 2", NEMA 4X.
    - Used for terminating field fabricated heating cables.
    - Suitable for use with PLT-LP and PLT-LPS connection kits.
- Tape
  - GT-60 (60 Yards),
  - GT-6 (20 Yards)
    - Fiberglass Tape, 0.5" wide.
    - Used to attach heater cables to pipe or to attach temperature sensors to the pipe when corrosive conditions prevent the use of aluminum tape.
- Warning Sign
  - WS-100 Weatherproof Warning Sign
    - Used for cautioning maintenance personnel of the presence of electric heat tracing cable under the insulation.
    - Attached to the outside of pipe insulation in frequent intervals.
    - Black Lettering with Yellow background.

Notes:
① Suitable for use with any approved industrial enclosure with a maximum wall thickness of .1875" or conduit outlet/junction box with .75" threaded hubs.
② Selection of -U grommet includes (1) additional power termination and (1) additional end seal for multiple cable entry.

© March 2019

PLT–Series Connection Kits and Accessories

Domestic Hot Water Temperature Maintenance System

UL:
Rated for Ordinary (Unclassified) Locations

Nelson's PLT Series non-metallic connection kits include all components necessary to complete the installation of Nelson's full line of heat tracing cables. The selection table below allows for the proper specifying of the complete connection kit assembly (example: PLT-LP-J).

Catalog Numbering Guide

PLT
Product Family

LP
Specify Kit Configuration:
LP - Power Connection w/o Junction Box ①
LPS - Power Connection w/o Junction Box ①
w/Shrink Terminations

J
Specify Cable Construction:
J - Over Jacketed Heater
U - Multiple (2) Cable Entry

① *Suitable for use with any approved industrial enclosure with a maximum wall thickness of .1875" or conduit outlet/junction box with .75" threaded hubs.*

© March 2019

Frost Heave Prevention Design Guide

Description

- Cold storage areas and freezers are continuously maintained at temperatures at or below freezing.
- As a result, the concrete floor and substrate will also experience temperatures below freezing.
- Ice formation can occur in unheated substrates causing soil expansion and damage to the floor.
- To prevent frost heave conditions, electrical heating cables are installed in the sub-structure to maintain soil temperatures above freezing and prevent ice lens formation.

Application

- To prevent frost heave conditions, electrical heating cables are installed in the sub-structure to maintain soil temperatures above freezing and prevent ice lens formation.
- Electrical heating cables are installed in conduit located in the sub-structure below the floor insulation barrier.
- The sub-structure can be any suitable construction material, such as, concrete, compacted sand or in some cases, compacted soil.
- Conduit spacing is typically 0.6 m-1.2 m (2 ft-4 ft) on centers.

Design

- The heating load for a typical frost heave application is mostly dependent on the thermal insulation barrier between the concrete floor and the sub-structure.
- Standard applications that are below grade do not require any additional considerations.
- For applications that are above grade level, thermal insulation must be installed around the perimeter of the refrigerated area.
- Heater cable selection is a function of the minimum freezer design temperature, thermal resistance (R-Value) of the insulation barrier, and the conduit spacing.
- The R-Value can be calculated by dividing the insulation thickness (in inches) by the insulation thermal conductivity (K Factor).

Control

- Temperature control is recommended for this application to reduce the freezer loading and energy consumption during operation. Temperature sensors should be located in conduit midway between cable runs. An evaluation of energy savings of a control system Vs system cost and maintenance cost should be done for each installation.

Circuit Protection

- It is recommended that ground fault circuit protection for equipment be provided for cables installed in electrically heated foundations.

Monitoring

- Ground leakage monitoring is recommended for cables installed in electrically heated foundations to detect dielectric integrity.
- Current monitoring is recommended for cables installed in electrically heated foundations to detect changes in the heater power outputs.

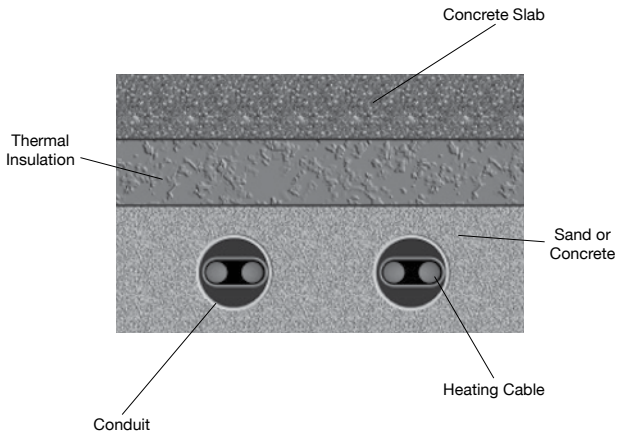

Typical Frost Heave Prevention Sub–Structure

Visit our website at www.nelsonheaters.com or contact us at United States: (800) 621-1506 | Europe: +33.3.22.54.13.90.
© March 2019

EMERSON

Frost Heave Prevention Design Guide

Determine your conduit spacing and cable wattage requirement from the charts below. Select the appropriate chart based on your specified insulation resistance factor and the minimum freezer temperature.

Frost Heave Prevention Data
R-10 Insulation

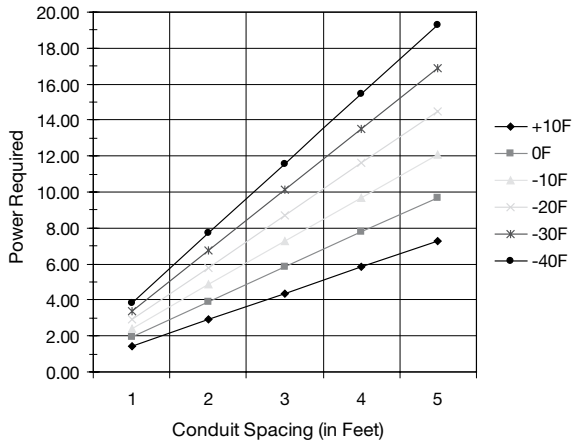

Frost Heave Prevention Data
R-20 Insulation

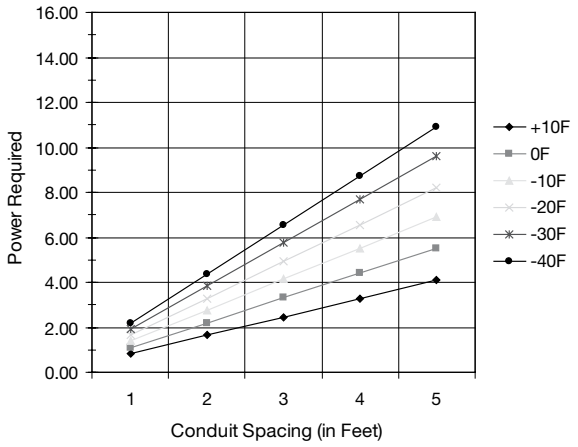

Frost Heave Prevention Data
R-30 Insulation

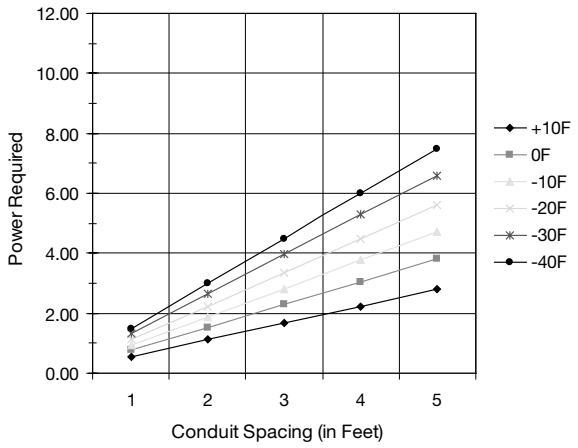

Frost Heave Prevention Data
R-40 Insulation

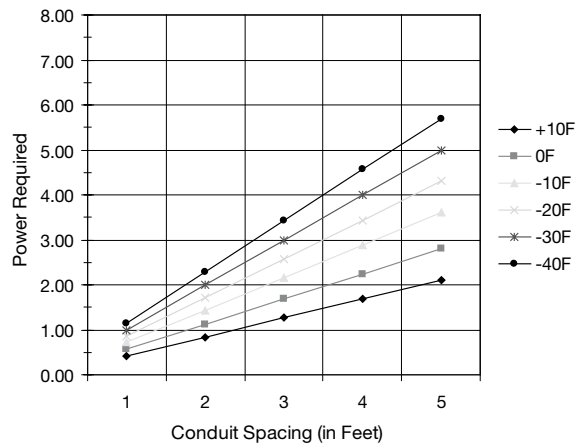

Note: Power required is expressed in watts per linear foot of heating cable. Charts are base on a 50% safety factor per recommendations in IEEE Std 515.1, Frost heave prevention in foundations.

© March 2019

Cable Selection
To provide ease of repair or retrofit of the installed heating cables, the cable is typically installed in conduit. Each cable type must be evaluated for its design and installation requirements.

Self-Regulating Heating Cables
a) For below grade applications, polymer overjacketed constructions are recommended.
b) When installed in conduit, self-regulating cables require adjustments to power output to compensate for the installation method.

Cable Type	Adjustment Factor
LT Series	0.60
CLT Series	0.65
HLT Series	0.90

c) Verify that the thermal output and resulting sheath temperatures are compatible with the conduit or piping materials.
d) Terminate heating cables with components approved for use with the specific cable.

Parallel Constant-Wattage Heating Cables
a) For below grade applications, polymer overjacketed constructions are recommended.
b) Installed cable lengths must be adjusted to account for heating zone spacing and cold lead length.
c) Verify that the thermal output and resulting sheath temperatures are compatible with the conduit or piping materials.
d) Tight bending radius and hairpin layouts must be avoided when possible.
e) Terminate heating cables with components approved for use with the specific cable.

Mineral Insulated Heating Cables
a) Design for straight runs with minimal bending requirements only.
b) Installed cable lengths must be adjusted to account for cold lead length.
c) Verify that the thermal output and resulting sheath temperatures are compatible with the conduit or piping materials.

Typical Conduit Layout

Layout conduit system based on power required and selected conduit spacing.

- Space conduit runs equally to cover area to be heated.
- Do not locate conduit closer than 4” from the edge of the subfloor or penetrations.
- Design for only one heater per conduit run.
- Do not cross expansion or control joints.
- The maximum degree of conduit turn is 180 degrees.
- The heating cable must not extend outside of the room in which it originates.
- The heating cable must not be installed in walls or ceilings.
- Do not exceed maximum segment length of selected heater per conduit run.

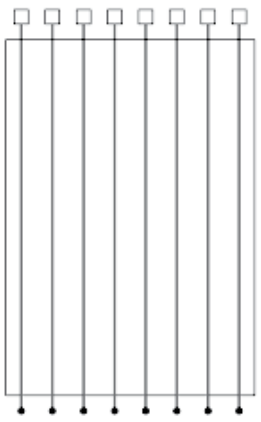

Straight Run Layout

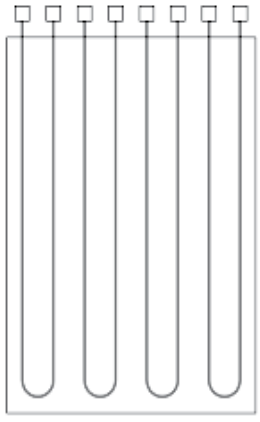

Hairpin Layout

Visit our website at www.nelsonheaters.com or contact us at United States: (800) 621-1506 | Europe: +33.3.22.54.13.90.
© March 2019
EMERSON

To determine the heat loss that must be replaced by the heating cable, the following should be determined:

- TF Fluid temperature to be maintained
- TA Minimum ambient temperature
- Size of pipe to be heated
- Thermal insulation- type and thickness

1. Temperature Differential
Determine the temperature differential to be maintained by subtracting the ambient temperature from the fluid temperature to be maintained. (TF-TA)

2. Heat Loss
Use Table 5 to look up the heat loss for the proper pipe diameter and thickness of insulation. If a rigid insulation such as calcium silicate is used, the insulation should be oversized to the next available size. Insulation should also be oversized when using any cable besides the standard self-regulating heater, without over jackets. This will allow adequate space for the heating cable and allow the insulation joints to properly seal. As an example, you would use 2 inch pipe diameter heat losses for 1-1/2 inch pipe heating application if rigid insulation were used. Heat loss figures from Table 3 include a 10% safety factor.

3. Adjustments to Heat Loss Values
The heat losses in Table 3 are based on glass fiber insulation. If other insulations are used, multiply the heat loss value by the correction factor (shown in Table 6) for your insulation. Heat losses are based on outdoor applications with 20 m.p.h. wind. If piping is used indoors, multiply heat loss values by 0.9.

4. Adjustments for Heat Sinks
Any thermally conductive item that protrudes through the insulation will require extra heat to be applied to the pipe. The footage shown in Table 5 should be added to the required heater cable length to compensate for these extra heat losses. When multiple-tracing or spiraling cable, increase the cable adders proportionately.

5. Spiral Pitch Factor
For some applications the effective cable heat output per foot of pipe may be increased by spiraling the heater along the pipe. Use Table 6 to determine the spiral pitch factor.

Example:

- Water line to be maintained at +10°C (+50°F)
- Minimum ambient temperature is -23°C (-10°F)
- Pipe is three-inch diameter steel
- Insulation is one-inch thick mineral fiber insulation

1. Calculate Temperature Differential

$\Delta T=TF-TA$	$\Delta T=TF-TA$
$\Delta T=10 - (-23)$ C	$\Delta T=50 - (-10)$ F
$\Delta T= 33$°C	$\Delta T= 60$°F

2. Heat Loss
Use Table 3 to find heat loss. Where the desired temperature differential falls between two values, use interpolation:

From Table 3: @10°C Q= 14.4 w/m @ 38°C Q= 30.2 w/m

QF= 14.4 w/m + (-10/23) x (20.2w/m -14.4)

QF = 14.4 + (-2.5) = 11.9 w/m

From Table 3: @50°F Q= 4.4 w/ft @100°F Q= 9.2 w/ft

QF=4.4 w/ft + 10/50 x (9.2 – 4.4 w/ft)

QF=4.4 + 0.96=5.4 w/ft

3. Adjustments to Heat Loss
Adjust the heat loss for mineral fiber. From Table 4, the adjustment factor is 1.2.

QM = QF x 1.2	QM = QF x 1.2
QM = 11.9 w/m. x 1.2	QM = 5.4 w/ft. x 1.2
QM = 14.3 w/m	QM = 6.5 w/ft.

Since the piping is outdoors, no adjustment is necessary for the absence of wind.

© March 2019

Table 3: Pipe Heat Loss

Insulation Thickness Millimeters (Inches)	ΔT °C (°F)	Pipe Diameter (IPS) in Inches / Tubing Size (Inches)									
		1/2 / 3/4	3/4 / 1	1 / 1–1/4	1–1/4 / 1–1/2	1–1/2 / 2	2	2–1/2	3	4	6
25.0 (1.0)	-12 (10)	1.0 (0.3)	1.3 (0.4)	1.3 (0.4)	1.6 (0.5)	2.0 (0.6)	2.3 (0.7)	2.6 (0.8)	3.0 (0.9)	3.6 (1.1)	5.0 (1.5)
	10 (50)	5.6 (1.7)	6.2 (1.9)	7.2 (2.2)	8.2 (2.5)	9.2 (2.8)	10.8 (3.3)	12.5 (3.8)	14.4 (4.4)	17.7 (5.4)	24.6 (7.5)
	38 (100)	11.5 (3.5)	12.8 (3.9)	14.8 (4.5)	17.4 (5.3)	19.0 (5.8)	22.3 (6.8)	25.9 (7.9)	30.2 (9.2)	37.1 (11.3)	51.5 (15.7)
	65 (150)	17.7 (5.4)	20.3 (6.2)	23.3 (7.1)	27.2 (8.3)	29.8 (9.1)	35.1 (10.7)	40.7 (12.4)	47.2 (14.4)	57.7 (17.6)	80.7 (24.6)
	93 (200)	24.6 (7.5)	28.2 (8.6)	32.5 (9.9)	37.7 (11.5)	41.3 (12.6)	48.9 (14.9)	56.4 (17.2)	65.6 (20.0)	80.4 (24.5)	112.2 (34.2)
	121 (250)	1.0 (0.3)	36.7 (11.2)	42.0 (12.8)	49.2 (15)	54.1 (16.5)	63.6 (19.4)	73.5 (22.4)	85.3 (26.0)	104.6 (31.9)	146.3 (44.6)
38.0 (1.5)	-12 (10)	1.0 (0.3)	1.0 (0.3)	1.3 (0.4)	1.3 (0.4)	1.3 (0.4)	1.6 (0.5)	2.0 (0.6)	2.3 (0.7)	2.6 (0.8)	3.6 (1.1)
	10 (50)	4.3 (1.3)	4.9 (1.5)	5.6 (1.7)	6.2 (1.9)	6.9 (2.1)	8.2 (2.5)	9.2 (2.8)	10.5 (3.2)	12.8 (3.9)	17.4 (5.3)
	38 (100)	9.2 (2.8)	10.2 (3.1)	11.5 (3.5)	13.4 (4.1)	14.4 (4.4)	16.7 (5.1)	19.4 (5.9)	22.3 (6.8)	26.9 (8.2)	36.7 (11.2)
	65 (150)	14.4 (4.4)	16.1 (4.9)	18.0 (5.5)	21.0 (6.4)	22.6 (6.9)	26.6 (8.1)	30.2 (9.2)	34.8 (10.6)	42.0 (12.8)	57.7 (17.6)
	93 (200)	20.0 (6.1)	22.3 (6.8)	25.3 (7.7)	29.2 (8.9)	31.8 (9.7)	36.7 (11.2)	42.0 (12.8)	48.2 (14.7)	58.4 (17.8)	80.0 (24.4)
	121 (250)	25.9 (7.9)	29.2 (8.9)	32.8 (10)	38.0 (11.6)	41.3 (12.6)	47.9 (14.6)	54.8 (16.7)	63.0 (19.2)	76.1 (23.2)	104.3 (31.8)
50.0 (2.0)	-12 (10)	0.7 (0.2)	1.0 (0.3)	1.0 (0.3)	1.3 (0.4)	1.3 (0.4)	1.3 (0.4)	1.6 (0.5)	1.64 (0.5)	2.0 (0.6)	3.0 (0.9)
	10 (50)	3.4 (1.2)	4.3 (1.3)	4.6 (1.4)	5.2 (1.6)	5.9 (1.8)	6.6 (2.0)	7.5 (2.3)	8.5 (2.6)	10.2 (3.1)	13.8 (4.2)
	38 (100)	7.9 (2.4)	8.9 (2.7)	9.8 (3.0)	11.2 (3.4)	12.1 (3.7)	14.1 (4.3)	15.7 (4.8)	18.0 (5.5)	21.6 (6.6)	29.2 (8.9)
	65 (150)	12.5 (3.8)	13.8 (4.2)	15.4 (4.7)	17.7 (5.4)	19.0 (5.8)	22.0 (6.7)	24.9 (7.6)	28.2 (8.6)	33.8 (10.3)	45.6 (13.9)
	93 (200)	17.4 (5.3)	19.4 (5.9)	21.6 (6.6)	24.6 (7.5)	26.6 (8.1)	30.5 (9.3)	34.4 (10.5)	39.4 (12.0)	47.2 (14.4)	63.6 (19.4)
	121 (250)	22.6 (6.9)	25.3 (7.7)	28.3 (8.6)	32.1 (9.8)	34.8 (10.6)	39.7 (12.1)	44.9 (13.7)	51.2 (15.6)	61.3 (18.7)	83.0 (25.3)
63.0 (2.5)	-12 (10)	0.7 (0.2)	0.7 (0.2)	1.0 (0.3)	1.0 (0.3)	1.0 (0.3)	1.3 (0.4)	1.3 (0.4)	1.6 (0.5)	1.6 (0.5)	2.3 (0.7)
	10 (50)	3.3 (1.0)	3.9 (1.2)	4.3 (1.3)	4.6 (1.4)	5.2 (1.6)	5.9 (1.8)	6.6 (2.0)	7.5 (2.3)	8.9 (2.7)	11.8 (3.6)
	38 (100)	7.2 (2.2)	7.9 (2.4)	8.9 (2.7)	9.8 (3.0)	10.8 (3.3)	12.1 (3.7)	13.8 (4.2)	15.4 (4.7)	18.4 (5.6)	24.6 (7.5)
	65 (150)	11.2 (3.4)	12.5 (3.8)	13.8 (4.2)	15.7 (4.8)	16.7 (5.1)	19.0 (5.8)	21.6 (6.6)	24.3 (7.4)	28.9 (8.8)	38.4 (11.7)
	93 (200)	15.7 (4.8)	17.4 (5.3)	19.4 (5.9)	21.6 (6.6)	23.3 (7.1)	26.6 (8.1)	29.8 (9.1)	33.8 (10.3)	40.3 (12.3)	53.5 (16.3)
	121 (250)	20.3 (6.2)	22.6 (6.9)	24.9 (7.6)	28.2 (8.6)	30.5 (9.3)	34.8 (10.6)	39.0 (11.9)	44.3 (13.5)	52.5 (16)	69.9 (21.3)
75.0 (3.0)	-12 (10)	0.7 (0.2)	0.7 (0.2)	1.0 (0.3)	1.0 (0.3)	1.0 (0.3)	1.0 (0.3)	1.3 (0.4)	1.3 (0.4)	1.6 (0.5)	2.0 (0.6)
	10 (50)	3.28 (1.0)	3.6 (1.1)	3.4 (1.2)	4.3 (1.3)	4.6 (1.4)	5.2 (1.6)	5.9 (1.8)	6.6 (2.0)	7.9 (2.4)	10.2 (3.1)
	38 (100)	6.6 (2.0)	7.2 (2.2)	8.2 (2.5)	9.2 (2.8)	9.8 (3.0)	11.2 (3.4)	12.1 (3.7)	13.8 (4.2)	16.4 (5.0)	21.3 (6.5)
	65 (150)	10.5 (3.2)	11.5 (3.5)	12.8 (3.9)	14.1 (4.3)	15.1 (4.6)	17.4 (5.3)	19.4 (5.9)	21.6 (6.6)	25.6 (7.8)	33.8 (10.3)
	93 (200)	14.4 (4.4)	16.1 (4.9)	17.7 (5.4)	19.7 (6.0)	21.3 (6.5)	22.0 (6.7)	26.9 (8.2)	30.2 (9.2)	35.4 (10.8)	46.9 (14.3)
	121 (250)	19.0 (5.8)	20.7 (6.3)	23.0 (7.0)	25.6 (7.8)	27.6 (8.4)	31.2 (9.5)	34.8 (10.6)	39.4 (12.0)	46.2 (14.1)	61.0 (18.6)

© March 2019

Insulation Thickness Millimeters (Inches)	ΔT °C (°F)	8	10	12	14	16	18	20	24
25.0 (1.0)	-12 (10)	6.2 (1.9)	7.9 (2.4)	8.9 (2.7)	9.84 (3.0)	11.2 (3.4)	12.5 (3.8)	13.8 (4.2)	16.4 (5.0)
	10 (50)	31.16 (9.5)	37.7 (11.5)	44.3 (13.5)	48.2 (14.7)	54.8 (16.7)	61.0 (18.6)	67.2 (20.5)	80.0 (24.4)
	38 (100)	64.9 (19.8)	79.4 (24.2)	92.5 (28.2)	101.0 (30.8)	114.5 (34.9)	127.6 (38.9)	141.0 (43.0)	167.6 (51.1)
	65 (150)	101.7 (31.0)	124.0 (37.8)	145.0 (44.2)	158.4 (48.3)	179.1 (54.6)	200.1 (61.0)	220.7 (67.3)	262.4 (80.0)
	93 (200)	141.7 (43.2)	172.5 (52.6)	201.7 (61.5)	220.1 (67.1)	249.0 (75.9)	277.8 (84.7)	307.0 (93.6)	364.7 (111.2)
	121 (250)	184.0 (56.1)	224.4 (68.4)	262.4 (80)	286.3 (87.3)	323.7 (98.7)	361.5 (110.2)	399.2 (121.7)	474.3 (144.6)
38.0 (1.5)	-12 (10)	4.592 (1.4)	5.248 (1.6)	6.232 (1.9)	6.9 (2.1)	7.9 (2.4)	8.5 (2.6)	9.5 (2.9)	11.2 (3.4)
	10 (50)	22.0 (6.7)	26.6 (8.1)	30.8 (9.4)	33.5 (10.2)	37.7 (11.5)	42.0 (12.8)	46.6 (14.2)	55.1 (16.8)
	38 (100)	46.0 (14.0)	55.4 (16.9)	64.6 (19.7)	70.2 (21.4)	79.4 (24.2)	88.2 (26.9)	97.1 (29.6)	115.1 (35.1)
	65 (150)	71.8 (21.9)	86.9 (26.5)	101.0 (30.8)	110.2 (33.6)	124.3 (37.9)	138.4 (42.2)	152.5 (46.5)	180.4 (55.0)
	93 (200)	100.0 (30.5)	121.0 (36.9)	140.7 (42.9)	153.2 (46.7)	172.9 (52.7)	192.2 (58.6)	211.9 (64.6)	250.9 (76.5)
	121 (250)	129.9 (39.6)	157.4 (48.0)	183.0 (55.8)	199.1 (60.7)	224.7 (68.5)	250.3 (76.3)	275.8 (84.1)	326.7 (99.6)
50.0 (2.0)	-12 (10)	3.6 (1.1)	4.3 (1.3)	4.9 (1.5)	5.2 (1.6)	5.9 (1.8)	6.6 (2.0)	7.2 (2.2)	8.528 (2.6)
	10 (50)	17.1 (5.2)	20.7 (6.3)	23.9 (7.3)	25.9 (7.9)	29.52 (9.0)	32.5 (9.9)	35.8 (10.9)	42.3 (12.9)
	38 (100)	36.1 (11)	43.3 (13.2)	50.2 (15.3)	54.4 (16.6)	61.3 (18.7)	68.2 (20.8)	74.8 (22.8)	88.6 (27)
	65 (150)	56.4 (17.2)	67.9 (20.7)	78.7 (24)	85.6 (26.1)	96.1 (29.3)	106.9 (32.6)	117.4 (35.8)	138.7 (42.3)
	93 (200)	78.7 (24.0)	94.5 (28.8)	109.6 (33.4)	119.1 (36.3)	133.8 (40.8)	148.6 (45.3)	163.3 (49.8)	192.9 (58.8)
	121 (250)	102.3 (31.2)	123.0 (37.5)	142.7 (43.5)	154.8 (47.2)	174.2 (53.1)	193.5 (59.0)	212.9 (64.9)	251.2 (76.6)
63.0 (2.5)	-12 (10)	3.0 (0.9)	3.6 (1.1)	3.9 (1.2)	4.3 (1.3)	4.9 (1.5)	5.6 (1.7)	5.9 (1.8)	6.7 (2.1)
	10 (50)	14.4 (4.4)	17.1 (5.2)	19.7 (6.0)	21.6 (6.6)	23.9 (7.3)	26.6 (8.1)	29.2 (8.9)	34.4 (10.5)
	38 (100)	30.2 (9.2)	36.1 (11.0)	41.7 (12.7)	44.9 (13.7)	50.5 (15.4)	56.1 (17.1)	61.3 (18.7)	72.5 (22.1)
	65 (150)	47.2 (14.4)	56.4 (17.2)	65.3 (19.9)	70.5 (21.5)	79.0 (24.1)	87.9 (26.8)	96.4 (29.4)	113.5 (34.6)
	93 (200)	65.6 (20)	78.72 (24.0)	90.5 (27.6)	98.1 (29.9)	110.2 (33.6)	122.0 (37.2)	134.2 (40.9)	157.8 (48.1)
	121 (250)	85.6 (26.1)	102.3 (31.2)	118.1 (36.0)	127.9 (39.0)	143.3 (43.7)	159.1 (48.5)	174.5 (53.2)	205.3 (62.6)
75.0 (3.0)	-12 (10)	2.6 (0.8)	3.0 (0.9)	3.6 (1.1)	3.6 (1.1)	4.3 (1.3)	4.6 (1.4)	5.2 (1.6)	5.9 (1.8)
	10 (50)	12.5 (3.8)	14.8 (4.5)	17.1 (5.2)	18.4 (5.6)	20.6 (6.3)	23.0 (7.0)	24.9 (7.6)	29.2 (8.9)
	38 (100)	26.2 (8.0)	31.2 (9.5)	35.8 (10.9)	38.7 (11.8)	43.3 (13.2)	47.9 (14.6)	52.5 (16.0)	61.7 (18.8)
	65 (150)	41 (12.5)	48.9 (14.9)	56.1 (17.1)	60.7 (18.5)	67.9 (20.7)	75.1 (22.9)	82.0 (25.0)	96.4 (29.4)
	93 (200)	57.1 (17.4)	67.9 (20.7)	78.1 (23.8)	84.3 (25.7)	94.1 (28.7)	104.3 (31.8)	114.1 (34.8)	134.2 (40.9)
	121 (250)	74.1 (22.6)	88.2 (26.9)	101.4 (30.9)	109.9 (33.5)	122.7 (37.4)	135.8 (41.4)	148.9 (45.4)	174.8 (53.3)

© March 2019

Table 4: Insulation Factors

Preformed Pipe Insulation	Insulation (f)	Based on K factor @ 10°C (50° F) mean temp BTU/hr–°F–ft²/in
Glass Fiber	1.00	0.250
Calcium Silicate	1.72	0.375
Cellular Glass	1.84	0.400
Rigid Urethane	0.76	0.165
Foamed Elastomer	1.16	0.290
Mineral Fiber	1.20	0.300
Expanded Perlite	1.42	0.375
Mineral Wool	1.04	0.260
Polystyrene	1.04	0.260
Flexible Elastomer	1.16	0.290
Polyisocyanarate	0.68	0.170

Table 5: Heat Loss Adder

	Additional Heater Feet For Various Heat Sinks in Meters (Feet)					
Pipe Size	Standard Flange	Blind Flange	Pipe Support ①	Screwed or Welded Valve	Flanged Valve	Butterfly Valve
0.5	0.09 (0.3)	0.15 (0.5)	0.30 (1.0)	0.30 (1.0)	0.31 (1.0)	0.30 (1.0)
0.75	0.09 (0.3)	0.15 (0.5)	0.46 (1.5)	0.30 (1.0)	0.45 (1.5)	0.30 (1.0)
1.0	0.09 (0.3)	0.15 (0.5)	0.46 (1.5)	0.30 (1.0)	0.61 (2.0)	0.30 (1.0)
1.5	0.09 (0.3)	0.15 (0.5)	0.46 (1.5)	0.46 (1.5)	0.76 (2.5)	0.46 (1.5)
2.0	0.09 (0.3)	0.15 (0.5)	0.61 (2.0)	0.61 (2.0)	0.76 (2.5)	0.61 (2.0)
3.0	0.15 (0.5)	0.23 (0.75)	0.61 (2.0)	0.762 (2.5)	0.91 (3.0)	0.76 (2.5)
4.0	0.15 (0.5)	0.23 (0.75)	0.76 (2.5)	0.91 (3.0)	1.22 (4.0)	0.91 (3.0)
6.0	0.23 (0.75)	0.30 (1.0)	0.76 (2.5)	1.07 (3.5)	1.52 (5.0)	1.07 (3.5)
8.0	0.23 (0.75)	0.30 (1.0)	0.76 (2.5)	1.22 (4.0)	2.13 (7.0)	1.22 (4.0)
10.0	0.23 (0.75)	0.30 (1.0)	0.91 (3.0)	1.52 (5.0)	2.44 (8.0)	1.37 (4.5)
12.0	0.23 (0.75)	0.30 (1.0)	0.91 (3.0)	1.83 (6.0)	2.74 (9.0)	1.52 (5.0)
14.0	0.30 (1.0)	0.46 (1.5)	0.91 (3.0)	2.13 (7.0)	3.05 (10.0)	1.68 (5.5)
16.0	0.30 (1.0)	0.46 (1.5)	1.07 (3.5)	2.44 (8.0)	3.35 (11.0)	1.83 (6.0)
18.0	0.30 (1.0)	0.46 (1.5)	1.07 (3.5)	2.74 (9.0)	3.66 (12.0)	2.13 (7.0)
20.0	0.30 (1.0)	0.46 (1.5)	1.07 (3.5)	3.05 (10.0)	3.96 (13.0)	2.29 (7.5)
24.0	0.30 (1.0)	0.53 (1.75)	1.22 (4.0)	3.66 (12.0)	4.57 (15.0)	2.44 (8.0)

Nominal pipe length in meters (feet). Adders are for various in-line pipe fittings to compensate for greater areas of heat loss.
① NOTE: Values above are based on area average of various fittings available, and the assumption that fitting insulation will be equivalent to pipe insulation. The nominal length of tracer to be applied to a fitting would be the values shown in this chart plus the flange-to-flange length of the fitting.

© March 2019

Table 6: Spiral Pitch Factor

IPS (Inches)	Feet of Cable per Foot of Pipe in Millimeters (Inches)							
	1.1	1.2	1.3	1.4	1.5	1.6	1.7	1.8
1	229 (9)	152 (6)	127 (5)	102 (4)	102 (4)	76.2 (3)	76 (3)	76 (3)
1-1/4	279 (11)	203 (8)	152 (6)	127 (5)	127 (5)	101.6 (4)	102 (4)	76 (3)
1-1/2	330 (13)	229 (9)	178 (7)	152 (6)	127 (5)	127 (5)	102 (4)	102 (4)
2	406 (16)	279 (11)	229 (9)	178 (7)	152 (6)	152 (6)	127 (5)	127 (5)
2-1/2	508 (20)	356 (14)	279 (11)	229 (9)	203 (8)	178 (7)	152 (6)	152 (6)
3	610 (24)	432 (17)	330 (13)	279 (11)	254 (10)	229 (9)	203 (8)	178 (7)
4	787 (31)	533 (21)	432 (17)	356 (14)	330 (13)	279 (11)	254 (10)	229 (9)
6	1143 (45)	787 (31)	635 (25)	533 (21)	457 (18)	432 (17)	381 (15)	356 (14)
8	1499 (59)	1041 (41)	813 (32)	686 (27)	610 (24)	559 (22)	508 (20)	457 (18)
10	1880 (74)	1295 (51)	1041 (41)	864 (34)	762 (30)	686 (27)	635 (25)	584 (23)
12	2210 (87)	1524 (60)	1219 (48)	1041 (41)	914 (36)	813 (32)	762 (30)	686 (27)
14	2438 (96)	1676 (66)	1346 (53)	1143 (45)	991 (39)	889 (35)	813 (32)	737 (29)
16	2794 (110)	1930 (76)	1549 (61)	1295 (51)	1143 (45)	1016 (40)	940 (37)	864 (34)
18	3124 (123)	2261 (89)	1727 (68)	1473 (58)	1295 (51)	1143 (45)	1041 (41)	965 (38)
20	3480 (137)	2413 (95)	1930 (76)	1626 (64)	1422 (56)	1270 (50)	1168 (46)	1067 (42)
24	4166 (164)	2896 (114)	2311 (91)	1956 (77)	1702 (67)	1524 (60)	1397 (55)	1270 (50)

Example

For 3" pipe, with 1.3 feet of Self-Regulating heater cable per foot of pipe. P = 330.2 mm (13.0 in)

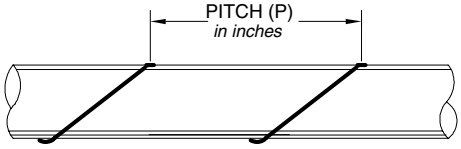

© March 2019

To calculate the heat loss that must be replaced by the heater, the following should be determined:

- TF Fluid temperature to be maintained
- TA Minimum ambient temperature
- Vessel surface area
- Thermal insulation type and thickness

1. Temperature Differential
Determine the temperature differential to be maintained by subtracting the ambient temperature from the fluid temperature to be maintained. (TF – TA).

2. Vessel Surface Area
Determine the total surface area A of the vessel using the appropriate formula (see below).

3. Surface Heat Loss
Use Table 7 to determine the surface heat loss from the vessel in watts/ft². Multiply this value by the total surface area calculated in step 2 to determine the total vessel heat loss.

4. Adjustments To Heat Loss Values
The heat losses in Table 7 are based on glass fiber insulation.
If other insulations are used, multiply the heat loss value by the correction factor (shown in Table 4) for your insulation.
Heat losses are based on outdoor applications with 20 m.p.h. wind.
If vessel is located indoors, multiply heat loss values by 0.9.
Heat losses are based on a 10% safety factor.

5. Adders For Heat Sinks
Any non-insulated thermally conductive item that protrudes through the insulation will require extra heat to be applied. Use Table 6 to determine the additional amount of heat to apply for various heat sinks. Add these totals to the heat loss calculated in Section 4.

Example

- Tank fluid is to be maintained at 71°C (160°F)
- Minimum ambient temperature is -12°C (10°F)
- Tank is round with flat heads, resting on concrete pad
- Height = 3.0m (10ft)
- Diameter = 2.4m (8ft)
- Insulation is 2" calcium silicate

1. Calculate temperature differential.

$(T_F-T_A) = 71- (-12) = 83°C$ $(T_F-T_A) = 160 – 10 = 150°F$

2. Determine surface heat loss from Table 7.
The base heat loss is 66.7 w/m² (6.2 w/ft²) with glass fiber Insulation. To adjust for calcium silicate, multiply by 1.72 (from Table 4). This gives 115.2 w/m² (10.7 w/ft²). This applies to the top and sides.

3. Determine tank surface area.

Sides: $\pi DL = (\pi)(2.4)(3.0)= 22.6\ m^2$

Top: $\pi D^2/4 = (\pi)(2.4^2)(3.0)/4= 4.5\ m^2$

Bottom: $\pi D^2/4 = (\pi)(2.4^2)(3.0)/4= 4.5\ m^2$

Surface Area = 22.6 + 4.5 + 4.5 = 31.6

Sides: $\pi DL = (\pi)(8)(10)= 251.3\ ft^2$

Top: $\pi D^2/4 = (\pi)(8^2)/4 = 50.3\ ft^2$

Bottom: $\pi D^2/4 = (\pi)(8^2)/4 = 50.3\ ft^2$

Surface Area = 251.3 + 50.3 + 50.3 = 351.9 ft²

4. Determine heat loss from bottom.
Because the tank is resting on a concrete pad without insulation, the heat loss from the tank bottom must be determined from table 8.

$(T_F – 55°C) = (83-13) = 70°C$

From table 10, 0.377 x 70 = 26.4 w/m²

$(T_F – 55°F) =$

From table 10, 0.035 x 105 = 3.7 w/ft²

5. Calculate total tank heat loss.

Sides: 22.6 m² x 115.2 w/m² = 2604 watts

Top: 4.5 m² x 115.2 w/m² = 518 watts

Bottom: 4.5 m² x 26.4 w/m² =119 watts

Total Tank Loss: 2604 + 518 + 119 = 3241 watts

Sides: 251.3 ft² x 10.7 w/ft² = 2689 watts

Top: 50.3 ft² x 10.7 w/ft² = 538 watts

Bottom: 50.3 ft² x 3.7 w/ft² =188 watts

Total Tank Loss: 2689 + 538 + 188 = 3345 watts

© March 2019

	Vessel Type	Equation For Surface Area
	Rectangle	2 (WxL + WxH + LxH)
	Sphere	πD^2
	Round Horizontal	$\pi DL + \pi D^2/2$ (Sides) (Ends)
	Round Vertical	$\pi DH + \pi D^2/4 + \pi D^2/4$ (Sides) (Top) (Bottom)
	Cone	$H \times (D_1+D_2)/2 + \pi D_1^2/4 + \pi D_2^2/4$ (Sides) (Top) (Bottom)

Table 7: Vessel Heat Loss

Delta T °C (°F)	Insulation Thickness in Millimeters (Inches) 25 (1.0)	38 (1.5)	50 (2.0)	75 (3.0)
28 (50)	96.5 (3.8)	63.5 (2.5)	48.3 (1.9)	33.0 (1.3)
56 (100)	200.7 (7.9)	134.6 (5.3)	101.6 (4.0)	68.6 (2.7)
83 (150)	312.4 (12.3)	210.8 (8.3)	157.5 (6.2)	106.7 (4.2)
111 (200)	434.3 (17.1)	292.1 (11.5)	221.0 (8.7)	147.3 (5.8)
139 (250)	566.4 (22.3)	381.0 (15.0)	287.0 (11.3)	193.0 (7.6)
167 (300)	708.7 (27.9)	475.0 (18.7)	358.1 (14.1)	238.8 (9.4)

Table 8: Adders For Non Insulated Vessel Heat Sinks

Heat Sink Type	Watt Loss Adder
Support Leg	Add 1.51 (0.84) watts per degree temperature differential (°C/ °F) for each leg
Saddle Support	Add 13.7 (7.6) watts per degree temperature differential (°C/ °F) for each support
Concrete Pad	Calculate the heat loss from the tank bottom separate from the insulated tank. Use 0.377 w/m² (0.035 w/ft²) per degree temperature difference (°C/ °F) between fluid temperature (TF) and13°C (55°F) ground temperature
24” Manway	Add 5.6 (3.1) watts per degree temperature differential (°C/ °F) for each opening
36” Manway	Add 12.8 (7.1) watts per degree temperature differential (°C/ °F) for each opening

© March 2019

Notes

© March 2019

Notes

© March 2019

Notes

© March 2019

Notes

© March 2019

Notes

© March 2019

Notes

© March 2019

Notes

© March 2019

Notes

© March 2019

Notes

© March 2019

Innovative and reliable heat trace solutions for demanding environments.



Nelson is the cornerstone brand of Emerson's Electrical Apparatus and Lighting business; trusted worldwide to make electrical installations safer, more productive and more reliable.

United States (Headquarters)
Appleton Grp LLC
9377 W. Higgins Road
Rosemont, IL 60018
United States
T +1 800 621 1506

Europe
ATX SAS
Espace Industriel Nord
35, rue André Durouchez,
CS 98017
80084 Amiens Cedex 2, France
T +33 3 2254 1390

Canada
EGS Electrical Group Canada Ltd.
99 Union Street
Elmira ON, N3B 3L7
Canada
T +1 888 765 2226

Asia Pacific
EGS Private Ltd.
Block 4008, Ang Mo Kio Ave 10,
#04-16 TechPlace 1,
Singapore 569625
T +65 6556 1100

Latin America
EGS Comercializadora Mexico S de RL de CV
Calle 10 N°145 Piso 3
Col. San Pedro de los Pinos
Del. Álvaro Obregon
Ciudad de México. 01180
T +52 55 5809 5049

Australia Sales Office
Bayswater, Victoria
T +61 3 9721 0348

China Sales Office
Shanghai
T +86 21 3338 7000

Middle East Sales Office
Dammam, Saudi Arabia
T +966 13 510 3702

Chile Sales Office
Las Condes
T +56 2928 4819

India Sales Office
Chennai
T +91 44 3919 7300

Korea Sales Office
Seoul
T +82 2 3483 1555

Jebel Ali- Dubai Office
Emerson, Building A
Appleton Group
Jebel Ali Free Zone- South
T +971 4 811 81 00

Emerson.com
LinkedIn.com/company/emerson

The Emerson logo is a trademark and service mark of Emerson Electric Co. Nelson is a registered trademark of Appleton Grp LLC. All other marks are the property of their respective owners. © 2019 Emerson Electric Co. All rights reserved.

EMERSON™

CONSIDER IT SOLVED™